Application Notes & Protocols: Ethylamine Hydriodide in Tandem Solar Cells

Author: BenchChem Technical Support Team. **Date**: May 2026

Compound of Interest

Compound Name:	*Ethylamine hydriodide*
CAS No.:	*506-58-1*
Cat. No.:	*B1338398*

Get Quote

Prepared by: Gemini, Senior Application Scientist

For: Researchers, scientists, and professionals in photovoltaics and materials science.

Introduction: The Imperative for Perfection in Perovskite Tandem Solar Cells

The rapid ascent of perovskite-silicon tandem solar cells beyond the 30% power conversion efficiency (PCE) mark represents a monumental leap in photovoltaic technology.[1][2] This architecture, which pairs a wide-bandgap perovskite top cell with a silicon bottom cell, effectively captures a broader portion of the solar spectrum, promising to shatter the theoretical efficiency limits of single-junction cells.[1]

However, the solution-processed nature of polycrystalline perovskite films, while cost-effective, invariably introduces a high density of defects.[3][4][5] These defects—primarily located at the film's surface and along grain boundaries—act as non-radiative recombination centers, trapping charge carriers and creating pathways for ion migration.[4][6] This fundamentally limits

© 2026 BenchChem. All rights reserved.

the open-circuit voltage (VOC) and long-term operational stability of the device, which are critical hurdles on the path to commercialization.[4]

Defect passivation has therefore emerged as a crucial strategy for unlocking the full potential of these devices.[6] Among the various passivating agents, short-chain organic alkylammonium halides like **Ethylamine Hydriodide** (EAI) and its close analogs, such as Propylamine Hydriodide (PAI), have proven exceptionally effective.[3][5][7] This guide provides a detailed exploration of the scientific principles and actionable protocols for leveraging EAI to enhance the performance and stability of perovskite-based tandem solar cells.

Part 1: The Scientific Basis for **Ethylamine Hydriodide** Application

Core Mechanism: Multi-Modal Defect Passivation

The efficacy of EAI lies in its ability to interact with and neutralize the most common and detrimental defects in perovskite films. Polycrystalline films suffer from undercoordinated Pb2+ ions and halide vacancies (I-), which create deep-level traps within the bandgap.[6]

EAI addresses these issues through two primary mechanisms:

- Lewis Acid-Base Interaction: The amine group (-NH3+) in the ethylammonium cation acts as a Lewis base, donating a lone pair of electrons to the undercoordinated Pb2+ ions (a Lewis acid) at the perovskite surface and grain boundaries. This coordination effectively passivates the Pb2+-related defects.[1][8]

- Hydrogen Bonding: The hydrogen atoms on the protonated amine group can form strong hydrogen bonds (N-H···I) with excess halide ions (I-) at the surface.[9] This interaction not only passivates halide-related defects but also helps to suppress ion migration, a key degradation pathway.[9]

Furthermore, the introduction of bulky organic cations like ethylammonium at the surface can form a thin, quasi-2D perovskite layer. This layer can act as a barrier, preventing moisture ingress and further enhancing environmental stability.[10]

© 2026 BenchChem. All rights reserved.

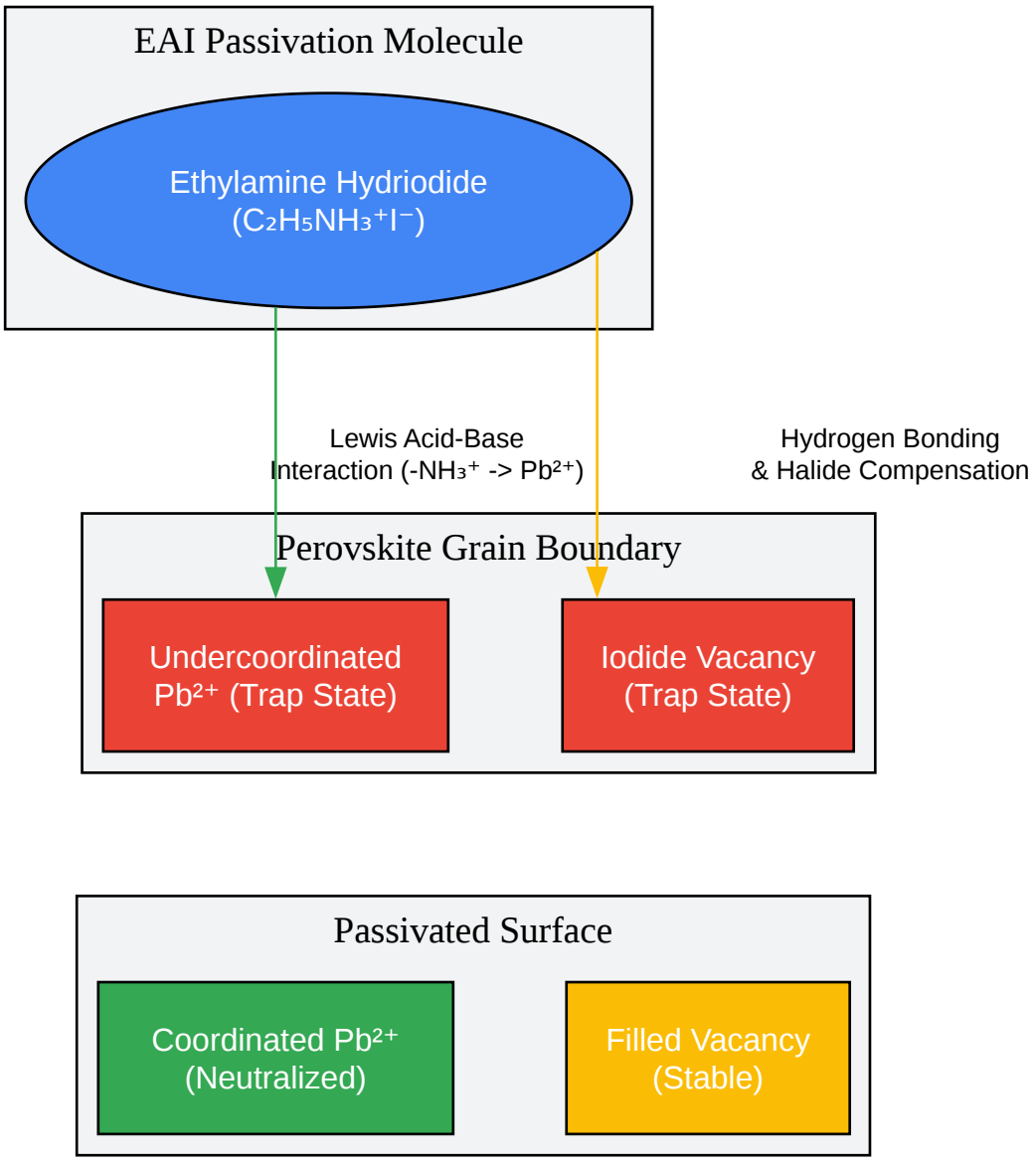

Click to download full resolution via product page

Caption: Mechanism of EAI in passivating common perovskite defects.

Impact on Perovskite Film Properties & Device Performance

The chemical interactions initiated by EAI translate directly into improved material properties and, consequently, superior device performance.

© 2026 BenchChem. All rights reserved.

- Reduced Non-Radiative Recombination: By healing the electronic trap states, EAI significantly suppresses trap-assisted non-radiative recombination.[1][3] This is the primary reason for the substantial increase in the open-circuit voltage (VOC), a key metric for solar cell efficiency.[5]

- Enhanced Crystallinity and Morphology: Additives like EAI can modulate the crystallization process of the perovskite film. Studies on similar molecules show they can retard fast crystallization, leading to larger, more uniform grains with fewer grain boundaries.[1][2] This improves charge transport and reduces defect density.

- Improved Stability: Passivation of reactive defect sites and the potential formation of a protective surface layer make the perovskite film more resilient to degradation from moisture and heat.[5][10] Devices treated with similar amine hydroiodides have shown significantly longer operational lifetimes under stress conditions.[1][5]

The culmination of these benefits is a marked improvement in all key photovoltaic parameters, as summarized in the table below based on results from analogous short-chain alkylammonium halide treatments.

© 2026 BenchChem. All rights reserved.

Photovoltaic Parameter	Typical Control Device	Expected Result with EAI Treatment	Rationale
Power Conversion Efficiency (PCE)	18-20% (single junction)	>22% (single junction)	Overall improvement from gains in VOC and FF.[1][3]
Open-Circuit Voltage (VOC)	~1.10 V	>1.15 V	Significant reduction in non-radiative recombination.[1]
Fill Factor (FF)	~77%	>84%	Improved charge extraction and reduced series resistance.[1]
Trap-State Density (Nt)	~2.6 x 1016 cm-3	~1.8 x 1016 cm-3	Direct result of defect passivation.[1]
Operational Stability	80% of initial PCE after 160h	>90% of initial PCE after 200h	Reduced ion migration and environmental protection.[5]

Part 2: Experimental Protocols

These protocols are designed to be self-validating. Each step includes the scientific reasoning, allowing for adaptation and troubleshooting. All procedures involving solvents like DMF and isopropanol should be performed in a nitrogen-filled glovebox.

Protocol 2.1: Post-Deposition Surface Treatment of Perovskite Films

This is the most common and effective method for applying passivating agents like EAI, as it targets the defect-rich surface of the pre-formed perovskite layer without altering the bulk composition.

Materials & Reagents:

- Pre-fabricated perovskite-on-substrate films (e.g., via a two-step method[5][11]).

© 2026 BenchChem. All rights reserved.

- **Ethylamine Hydriodide** (EAI), high purity (>99.5%).
- Anhydrous Isopropanol (IPA).
- Micropipettes, spin coater, hotplate.

Procedure:

- Prepare the EAI Passivation Solution:
  - Dissolve EAI in anhydrous IPA to a concentration of 1 mg/mL.
  - Causality: IPA is chosen as the solvent because it can dissolve EAI without dissolving the underlying perovskite film, ensuring the treatment is confined to the surface. The 1 mg/mL concentration is a well-established starting point for similar passivators, balancing effective treatment with avoiding excess organic residue.[7]
- Apply the Solution:
  - Place the perovskite film substrate onto the spin coater chuck.
  - Dispense 100 µL of the EAI/IPA solution to completely cover the perovskite surface.
  - Allow the solution to sit on the substrate for 30 seconds.
  - Causality: The incubation period allows sufficient time for the EAI molecules to diffuse to the surface and interact with defect sites before the excess is removed.
- Spin Coating:
  - Spin coat the substrate at 4000 RPM for 30 seconds.
  - Causality: This step removes the solvent and any excess, unreacted EAI, leaving a thin layer of passivating molecules at the surface and grain boundaries.
- Annealing:
  - Transfer the substrate to a hotplate pre-heated to 100°C.

© 2026 BenchChem. All rights reserved.

- Anneal for 10 minutes.
- Causality: The gentle thermal annealing step helps to drive off any residual solvent and promotes the formation of stable bonds between the EAI and the perovskite surface.

- Device Completion:
  - Proceed immediately with the deposition of the hole transport layer (e.g., Spiro-OMeTAD) to prevent atmospheric contamination of the newly passivated surface.[11]

© 2026 BenchChem. All rights reserved.

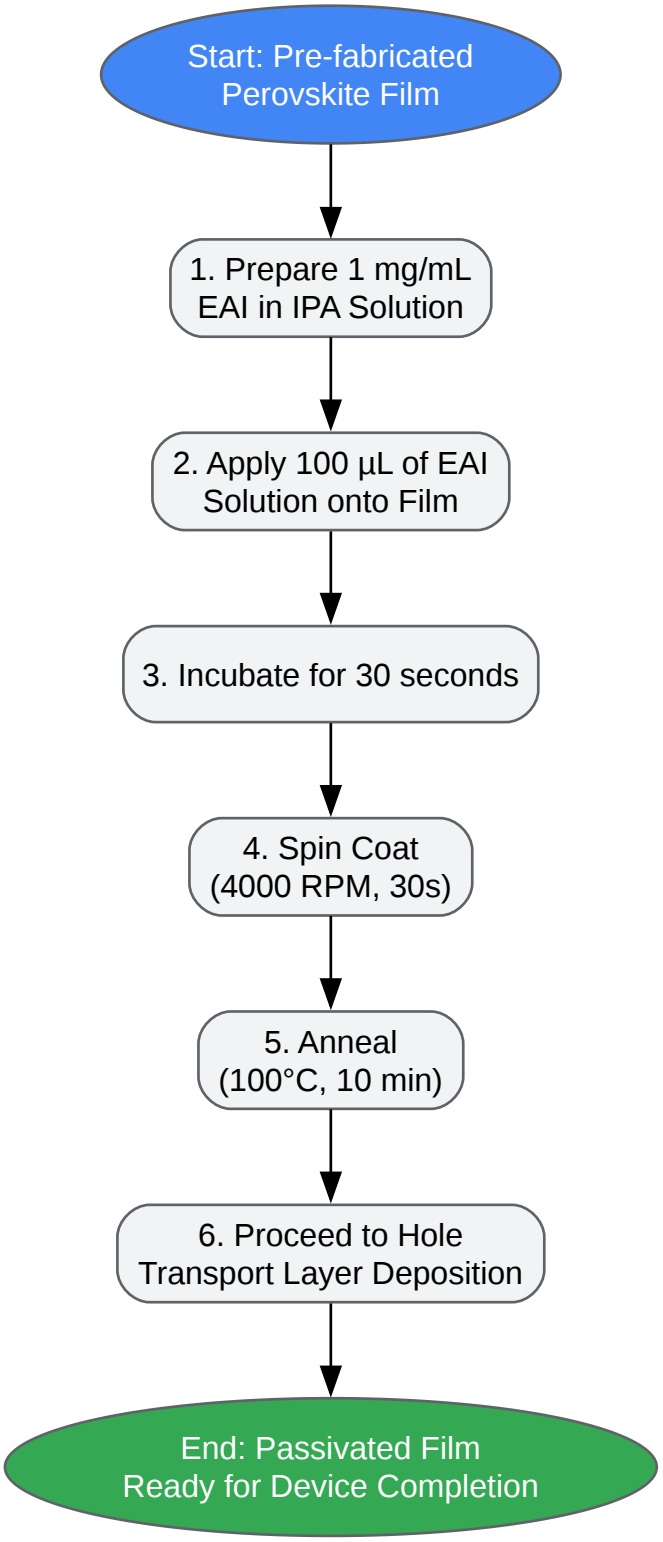

Click to download full resolution via product page

Caption: Workflow for post-deposition surface passivation with EAI.

© 2026 BenchChem. All rights reserved.

Protocol 2.2: Incorporating EAI as a Perovskite Precursor Additive

While less common for simple passivation, adding EAI directly to the precursor can influence crystal growth. This protocol should be used when aiming to modify the bulk properties of the perovskite film.

Materials & Reagents:

- Lead (II) Iodide (PbI2)
- Formamidinium Iodide (FAI)
- Methylammonium Bromide (MABr)
- Cesium Iodide (CsI)
- **Ethylamine Hydriodide** (EAI)
- Anhydrous DMF:DMSO solvent mixture (e.g., 4:1 v/v)

Procedure:

- Prepare the Control Perovskite Precursor Solution (e.g., for a 1.6 eV bandgap):
  - Create a standard "triple cation" precursor solution (e.g., FAPbI3)0.95(MAPbBr3)0.05 with added CsI. The exact molar ratios should be based on your established baseline recipe.
- Prepare the EAI-Modified Precursor Solution:
  - To the control solution, add EAI at a specific molar ratio relative to the lead content. A typical starting range is 0.1% to 1.0% mol.
  - Example Calculation (for 0.5% mol): If your precursor has 1M of PbI2, you would add 0.005M of EAI.
  - Causality: Low concentrations are used because EAI is intended as an additive to influence crystallization, not as a primary A-site cation. Higher concentrations could disrupt

© 2026 BenchChem. All rights reserved.

the 3D perovskite structure.

- Film Deposition and Annealing:
  - Follow your standard one-step spin coating and anti-solvent quenching procedure for perovskite film deposition.
  - Self-Validation: Process an EAI-modified film and a control film in parallel. Any changes in film color, drying time, or final appearance are direct indicators of the additive's effect on crystallization kinetics.
- Characterization:
  - Compare the two films using XRD and SEM to analyze changes in crystal orientation and grain size, respectively.

Part 3: Characterization and Validation

Validating the effect of EAI is critical. A combination of techniques should be used to build a complete picture of the improvements.[12][13]

© 2026 BenchChem. All rights reserved.

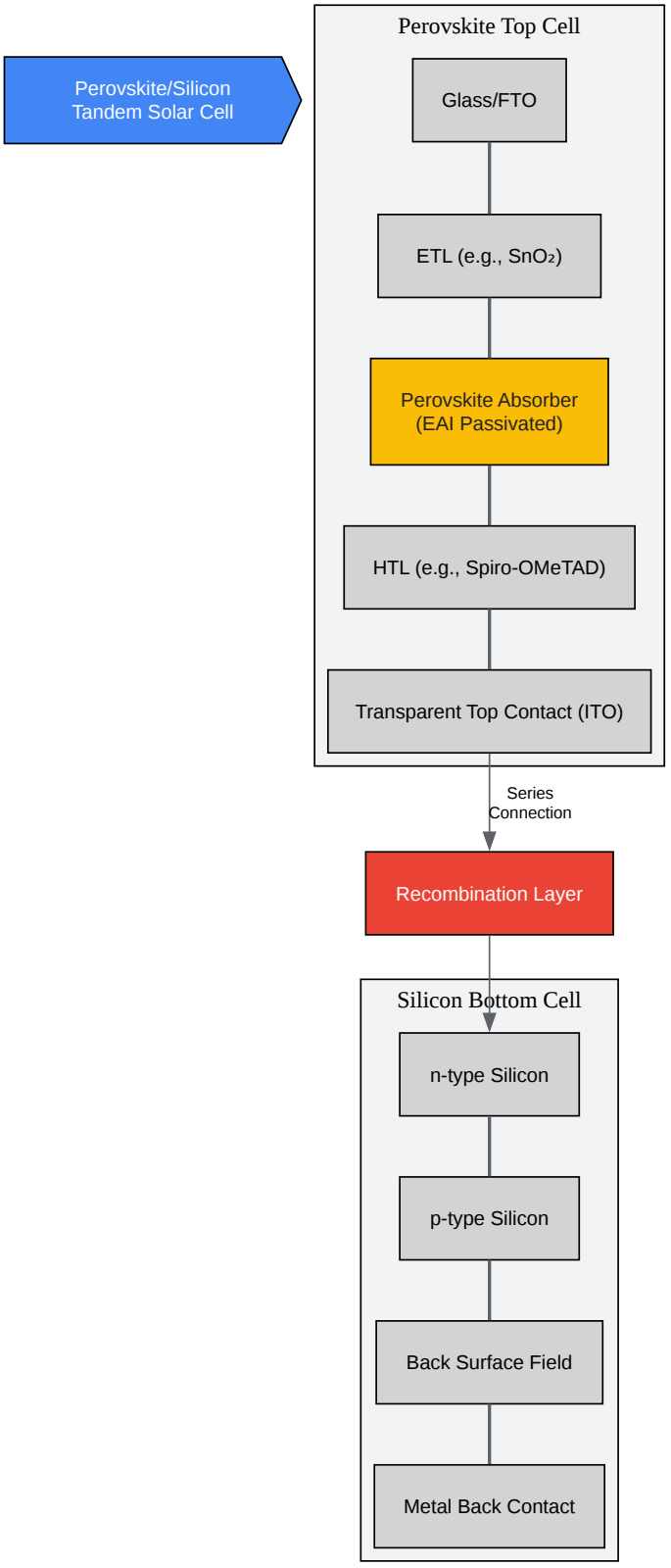

Click to download full resolution via product page

Caption: Structure of a tandem solar cell with an EAI-passivated perovskite layer.

© 2026 BenchChem. All rights reserved.

Technique	Purpose	Expected Outcome with EAI Treatment
Scanning Electron Microscopy (SEM)	Analyze film morphology and grain size.[14]	Larger, more uniform grains with less visible grain boundary voids compared to the control.
X-ray Diffraction (XRD)	Determine crystallinity and crystal orientation.[12]	Sharper and more intense diffraction peaks, potentially indicating enhanced crystallinity.
Photoluminescence (PL) & Time-Resolved PL (TRPL)	Measure defect density and charge carrier lifetime.[15]	Higher steady-state PL intensity and a longer carrier lifetime, indicating reduced non-radiative recombination.[7]
Space-Charge-Limited Current (SCLC)	Quantify the trap-state density (Nt).[1]	A lower trap-filled limit voltage (VTFL), which corresponds to a lower calculated Nt.[1]
Current-Voltage (J-V) Scans	Measure device performance (PCE, VOC, JSC, FF).[12]	Significant increases in VOC and FF, leading to a higher overall PCE.
External Quantum Efficiency (EQE)	Measure the cell's efficiency at each wavelength.	The integrated JSC from the EQE spectrum should match the J-V scan, validating the current measurement.

References

- NINGBO INNO PHARMCHEM CO.,LTD. The Chemical Foundation of Advanced Perovskite Solar Cells: The Role of 2-(4-Fluorophenyl)ethylamine Hydroiodide.
- Request PDF. Enhanced perovskite solar cell performance via defect passivation with ethylamine alcohol chlorides additive.
- Advanced Luminescence-Based Characterization Techniques For Perovskite Solar Cells.
- Ethylenediamine Based Surface Defect Passivation for Enhancing Indoor Photovoltaic Efficiency of Perovskite.
- Characterization Techniques for Perovskite Solar Cell M

© 2026 BenchChem. All rights reserved.

- A Review of Common Characterization Methods for Perovskite Solar Cells.
- Advanced Characterization Techniques for Overcoming Challenges of Perovskite Solar Cell M
- Enhancing Perovskite Solar Cell Performance through Propylamine Hydroiodide Passiv
- Textured Perovskite/Silicon Tandem Solar Cells Achieving Over 30% Efficiency Promoted by 4-Fluorobenzylamine Hydroiodide. PubMed Central.
- Advanced Characterization Techniques for Overcoming Challenges of Perovskite Solar Cell Materials. Laboratory for Energy Storage and Conversion - University of California San Diego.
- Defect Passivation of Perovskite Films for Highly Efficient and Stable Solar Cells.
- Defect Passivation Scheme toward High-Performance Halide Perovskite Solar Cells.
- Detailed protocol for fabrication of perovskite solar cells. YouTube.
- Efficient Semitransparent Solar Cells Enabled by Introducing N-Ethylbenzylamine Additives into Thin Layer of Halide Perovskites. PubMed.
- Textured Perovskite/Silicon Tandem Solar Cells Achieving Over 30% Efficiency Promoted by 4-Fluorobenzylamine Hydroiodide. Nano-Micro Letters.
- Textured Perovskite/Silicon Tandem Solar Cells Achieving Over 30% Efficiency Promoted by 4-Fluorobenzylamine Hydroiodide.
- Enhancing Perovskite Solar Cell Performance through Propylamine Hydroiodide Passiv
- Enhancing Perovskite Solar Cell Performance through Propylamine Hydroiodide Passivation.
- Boosting the efficiency of Ruddlesden–Popper tin perovskite solar cells through ethylenediamine dihydroiodide-mediated phase modulation.

Need Custom Synthesis?

BenchChem offers custom synthesis for rare earth carbides and specific isotopiclabeling.

Email: info@benchchem.com or Request Quote Online.

Sources

- 1. Textured Perovskite/Silicon Tandem Solar Cells Achieving Over 30% Efficiency Promoted by 4-Fluorobenzylamine Hydroiodide - PMC [pmc.ncbi.nlm.nih.gov]
- 2. Textured Perovskite/Silicon Tandem Solar Cells Achieving Over 30% Efficiency Promoted by 4-Fluorobenzylamine Hydroiodide | Nano-Micro Letters [nmlett.org]
- 3. Enhancing Perovskite Solar Cell Performance through Propylamine Hydroiodide Passivation - PubMed [pubmed.ncbi.nlm.nih.gov]

© 2026 BenchChem. All rights reserved.

- 4. researchgate.net [researchgate.net]
- 5. Enhancing Perovskite Solar Cell Performance through Propylamine Hydroiodide Passivation [mdpi.com]
- 6. Defect Passivation Scheme toward High-Performance Halide Perovskite Solar Cells - PubMed [pubmed.ncbi.nlm.nih.gov]
- 7. researchgate.net [researchgate.net]
- 8. Ethylenediamine Based Surface Defect Passivation for Enhancing Indoor Photovoltaic Efficiency of Perovskite [journal.kpvs.or.kr]
- 9. researchgate.net [researchgate.net]
- 10. nbinno.com [nbinno.com]
- 11. m.youtube.com [m.youtube.com]
- 12. Characterization Techniques for Perovskite Solar Cell Materials - 1st Edition | Elsevier Shop [shop.elsevier.com]
- 13. pure.skku.edu [pure.skku.edu]
- 14. A Review of Common Characterization Methods for Perovskite Solar Cells - Oreate AI Blog [oreateai.com]
- 15. Advanced Luminescence-Based Characterization Techniques For Perovskite Solar Cells [openresearch-repository.anu.edu.au]

- To cite this document: BenchChem. [Application Notes & Protocols: Ethylamine Hydriodide in Tandem Solar Cells]. BenchChem, [2026]. [Online PDF]. Available at: [https://www.benchchem.com/product/b1338398/docs#application-notes-protocols-ethylamine-hydriodide-in-tandem-solar-cells]

Disclaimer & Data Validity:

The information provided in this document is for Research Use Only (RUO) and is strictly not intended for diagnostic or therapeutic procedures. While BenchChem strives to provide accurate protocols, we make no warranties, express or implied, regarding the fitness of this product for every specific experimental setup.

Technical Support: The protocols provided are for reference purposes. Unsure if this reagent suits your experiment?

Need Industrial/Bulk Grade? Request Custom Synthesis Quote

© 2026 BenchChem. All rights reserved.

BenchChem

Our mission is to be the trusted global source of essential and advanced chemicals, empowering scientists and researchers to drive progress in science and industry.

Contact

Address: 3281 E Guasti Rd

Ontario, CA 91761, United States

Phone: (601) 213-4426

Email: info@benchchem.com

Contact our Ph.D. Support Team for a compatibility check

© 2026 BenchChem. All rights reserved.