Technical Guide: InChI Key & Chemical Identity of 3-(2-Methylphenyl)piperidine

Author: BenchChem Technical Support Team. **Date**: May 2026

Compound of Interest

Compound Name:	*3-(2-Methylphenyl)piperidine*
CAS No.:	*661470-63-9*
Cat. No.:	*B1337337*

Get Quote

Executive Summary

This technical guide provides a comprehensive analysis of **3-(2-Methylphenyl)piperidine**, a significant aryl-piperidine scaffold used in medicinal chemistry. While often sought for its structural relationship to central nervous system (CNS) stimulants and monoamine transporter inhibitors, its precise identification in cheminformatics is critical to avoid ambiguity with its isomers (e.g., 2- or 4-substituted analogs).

This document details the InChI Key and Standard InChI strings for both the free base and the commercially available hydrochloride salt. It further outlines the synthetic pathways, analytical characterization, and cheminformatic logic required to validate this compound in drug development workflows.

Part 1: Chemical Identity & InChI Architecture

The International Chemical Identifier (InChI) provides a layered description of the molecule's connectivity, tautomerism, and stereochemistry. For **3-(2-Methylphenyl)piperidine**, the distinction between the free base and its salt form is paramount for database linking.

© 2026 BenchChem. All rights reserved.

Identification Data Table

Identifier Type	Free Base (Theoretical/Parent)	Hydrochloride Salt (Commercial Standard)
CAS Number	661470-63-9	1185301-17-0 (or unassigned in some DBs)
IUPAC Name	3-(2-Methylphenyl)piperidine	3-(2-Methylphenyl)piperidine hydrochloride
SMILES	CC1=CC=CC=C1C2CCCNC2	Cl.CC1=CC=CC=C1C2CCCNC2
InChI String	InChI=1S/C12H17N/c1-10-5-2-3-7-12(10)11-6-4-8-13-9-11/h2-3,5,7,11,13H,4,6,8-9H2,1H3	InChI=1S/C12H17N.ClH/c1-10-5-2-3-7-12(10)11-6-4-8-13-9-11;/h2-3,5,7,11,13H,4,6,8-9H2,1H3;1H
InChI Key	Calculated from String (Hash of Free Base)	BHLYXIANQPHIQN-UHFFFAOYSA-N

> *Note on InChI Key: The key BHLYXIANQPHIQN-UHFFFAOYSA-N specifically resolves to the hydrochloride salt C12H17N.ClH. The first block (BHLYXIANQPHIQN) encodes the molecular skeleton (connectivity) of the piperidine-aryl system.*

InChI Generation Logic

The InChI string is constructed via a specific algorithm that ensures uniqueness.

- Formula Layer:C12H17N (12 Carbons, 17 Hydrogens, 1 Nitrogen).
- Connections Layer (/c): Defines the piperidine ring (11-6-4-8-13-9-11) attached at position 3 (11) to the phenyl ring (12) which bears a methyl group (1) at the ortho position (10).

© 2026 BenchChem. All rights reserved.

- Hydrogen Layer (/h): Fixes the mobile hydrogen atoms.
- Stereochemistry: The standard InChI provided (UHFFFAOYSA) implies an achiral or racemate definition (no specific /t layer for the C3 chiral center).

Part 2: Synthesis & Characterization Protocols

To ensure the validity of the chemical entity before generating an InChI, a robust synthesis and characterization workflow is required. The following protocol describes the "Reduction Route," favored for its high yield and atom economy.

Synthetic Route: Heterocyclic Reduction

Principle: The synthesis begins with the construction of the biaryl/heteroaryl scaffold via Suzuki coupling, followed by catalytic hydrogenation to saturate the pyridine ring.

Step 1: Suzuki Coupling

- Reagents: 3-Bromopyridine, 2-Methylphenylboronic acid, Pd(PPh3)4 (catalyst), Na2CO3.
- Conditions: Reflux in DME/Water (100°C, 12h).
- Product: 3-(2-Methylphenyl)pyridine.

Step 2: Catalytic Hydrogenation

- Reagents: 3-(2-Methylphenyl)pyridine, PtO2 (Adams' catalyst) or Pd/C, H2 (50 psi), HCl (conc).
- Solvent: Methanol or Ethanol.
- Mechanism: The pyridine ring is reduced to a piperidine ring. The presence of HCl ensures the product is isolated as the stable hydrochloride salt.

Visualization of Synthetic Logic

© 2026 BenchChem. All rights reserved.

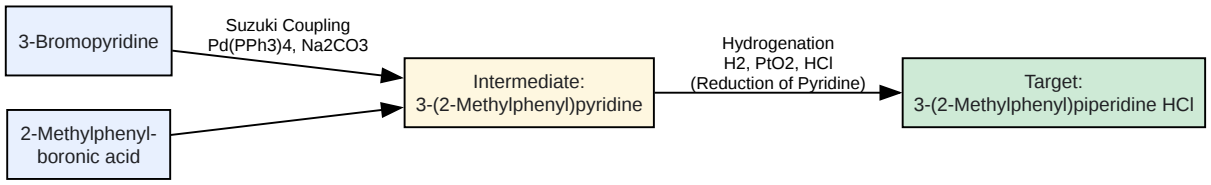

Click to download full resolution via product page

Figure 1: Synthetic pathway transforming pyridine precursors into the target piperidine scaffold.

Analytical Validation (Self-Validating Protocol)

Before assigning an InChI Key, the structure must be confirmed.

- 1H NMR (DMSO-d6, 400 MHz):
  - Aryl Region: 7.10–7.30 ppm (Multiplet, 4H, aromatic protons).
  - Methyl Group: ~2.30 ppm (Singlet, 3H, Ar-CH3). Distinctive for the ortho isomer.
  - Piperidine Ring: 2.80–3.40 ppm (Multiplets, ring CH2/CH adjacent to N).
  - Amine Proton: ~9.00 ppm (Broad singlet, NH2+ in salt form).
- Mass Spectrometry (LC-MS):
  - Expected [M+H]+: 176.14 m/z (Free base mass + H).

Part 3: Cheminformatics in Drug Development

The Role of the InChI Key

In drug discovery databases (e.g., PubChem, ChEMBL), the InChI Key serves as a fixed-length (27-character) hash that allows for rapid indexing.

- Collision Resistance: The first block (BHLYXIANQPHIQN) is unique to the skeleton. Any modification (e.g., moving the methyl group to the para position) would drastically change this block.

© 2026 BenchChem. All rights reserved.

- Stereochemistry Handling: If the synthesis produces a specific enantiomer (R or S), the standard InChI Key would change in the second block (e.g., UHFFFAOYSA might become QMMMGPOBSA).

Pharmacological Context

The 3-substituted piperidine scaffold is a "privileged structure" in medicinal chemistry, often serving as a bioisostere for phenethylamines.

- Target Class: Monoamine Transporters (DAT, NET, SERT).
- Structural Analogs: Closely related to 3-phenylpiperidine (a metabolite of designer drugs) and methylphenidate analogs.
- Toxicity Warning: As a secondary amine, it can form reactive metabolites. Researchers must handle the free base with care due to potential skin absorption.

Data Integration Workflow

© 2026 BenchChem. All rights reserved.

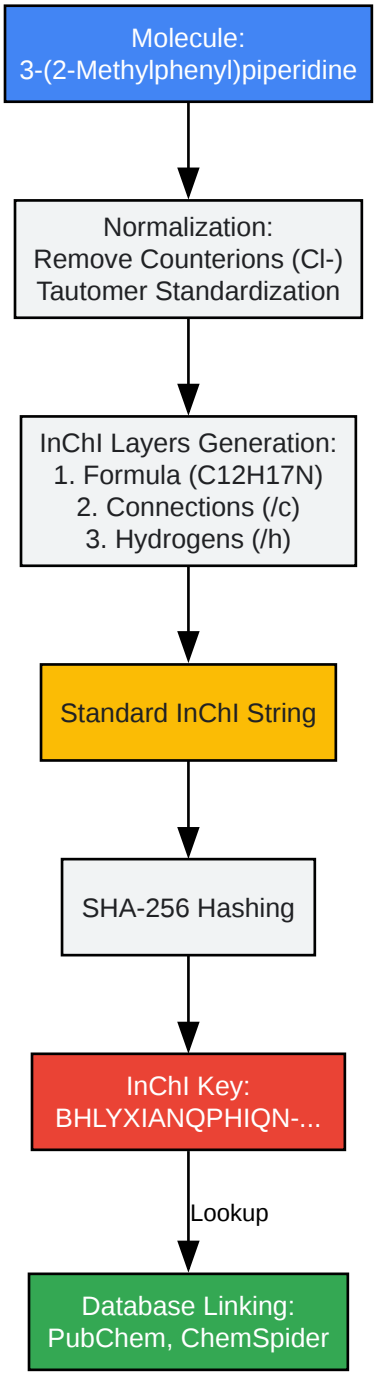

Click to download full resolution via product page

Figure 2: The algorithmic flow from molecular structure to database integration via InChI Key.

References

- PubChem. **3-(2-Methylphenyl)piperidine** hydrochloride (Compound).[1][2] National Library of Medicine. Available at: [Link]

© 2026 BenchChem. All rights reserved.

- IUPAC. InChI Trust: The IUPAC International Chemical Identifier. Available at: [Link]
- Organic Chemistry Portal. Synthesis of Piperidines. Available at: [Link]

Need Custom Synthesis?

BenchChem offers custom synthesis for rare earth carbides and specific isotopiclabeling.

Email: info@benchchem.com or Request Quote Online.

Sources

- 1. 3-(2-Methylphenyl)piperidine hydrochloride AldrichCPR | Sigma-Aldrich [sigmaaldrich.com]
- 2. 3-Piperidin-3-ylpropanamide hydrochloride AldrichCPR | Sigma-Aldrich [sigmaaldrich.com]
- To cite this document: BenchChem. [Technical Guide: InChI Key & Chemical Identity of 3-(2-Methylphenyl)piperidine]. BenchChem, [2026]. [Online PDF]. Available at: [https://www.benchchem.com/product/b1337337/docs#technical-guide-inchi-key-chemical-identity-of-3-2-methylphenyl-piperidine]

Disclaimer & Data Validity:

The information provided in this document is for Research Use Only (RUO) and is strictly not intended for diagnostic or therapeutic procedures. While BenchChem strives to provide accurate protocols, we make no warranties, express or implied, regarding the fitness of this product for every specific experimental setup.

Technical Support: The protocols provided are for reference purposes. Unsure if this reagent suits your experiment?

Need Industrial/Bulk Grade? Request Custom Synthesis Quote

BenchChem

Our mission is to be the trusted global source of essential and advanced chemicals, empowering scientists and researchers to drive progress in science and industry.

Contact

Address: 3281 E Guasti Rd

Ontario, CA 91761, United States

Phone: (601) 213-4426

Email: info@benchchem.com

Contact our Ph.D. Support Team for a compatibility check

© 2026 BenchChem. All rights reserved.