Technical Support Center: Navigating the Complexities of Sterically Hindered Aniline Characterization

Author: BenchChem Technical Support Team. **Date**: May 2026

Compound of Interest

Compound Name:	*4-(2,6-Dimethylphenoxy)aniline*
CAS No.:	*41280-55-1*
Cat. No.:	*B1336726*

Get Quote

Introduction: For researchers, scientists, and professionals in drug development, the characterization of sterically hindered anilines presents a significant analytical challenge. The bulky substituents ortho to the amino group, while often crucial for modulating reactivity and achieving desired pharmacological profiles, introduce a host of complexities in routine analytical workflows.[1] This technical support center provides a comprehensive resource of troubleshooting guides and frequently asked questions (FAQs) designed to address the specific issues encountered during the characterization of these challenging molecules. Here, we delve into the root causes of these analytical hurdles and offer field-proven solutions to ensure accurate and reliable characterization data.

Section 1: Nuclear Magnetic Resonance (NMR) Spectroscopy Challenges

The steric bulk in ortho-substituted anilines can lead to complex and often counterintuitive NMR spectra. Understanding these effects is paramount for correct structural elucidation.

© 2026 BenchChem. All rights reserved.

FAQ 1: Why are the aromatic proton signals in my sterically hindered aniline's ^{1}H NMR spectrum unusually broad or poorly resolved?

Answer: Peak broadening in the ^{1}H NMR spectra of sterically hindered anilines is a common observation and can be attributed to several factors:

- Hindered Rotation: The bulky ortho-substituents can restrict the free rotation of the amino group and the substituents themselves. If the rate of this rotation is on the same timescale as the NMR experiment, it can lead to the coalescence of signals, resulting in broad peaks.
- Molecular Aggregation: Sterically hindered anilines, despite their bulk, can form intermolecular hydrogen bonds or engage in π-π stacking, especially at higher concentrations. This self-aggregation can lead to changes in the chemical environment of the protons and result in signal broadening.
- Quadrupolar Effects: The nitrogen atom (^{14}N) has a quadrupole moment which can interact with the local electric field gradient. This interaction can provide a relaxation pathway for adjacent protons, leading to broader signals.

Troubleshooting Guide: Poorly Resolved ^{1}H NMR Aromatic Signals

© 2026 BenchChem. All rights reserved.

Symptom	Potential Cause	Troubleshooting Steps & Rationale
Broad, unresolved aromatic signals	Hindered rotation	1. Variable Temperature (VT) NMR: Acquire spectra at elevated temperatures (e.g., 50-100 °C).[2][3][4] Increased thermal energy can accelerate the rate of rotation, leading to sharper, time-averaged signals. Conversely, lowering the temperature may "freeze out" individual conformers, resulting in distinct, sharp signals for each.
Molecular Aggregation	1. Dilute the Sample: Re-run the NMR with a more dilute sample to minimize intermolecular interactions. 2. Change the Solvent: Use a solvent that can disrupt hydrogen bonding, such as DMSO-d_6 or MeOD.[5][6]	
Quadrupolar Broadening	1. Consider ^{15}N NMR: If available, acquiring a ^{15}N NMR spectrum can be informative as ^{15}N is a spin-½ nucleus and does not exhibit quadrupolar broadening. 2. Use 2D NMR: Techniques like HSQC can help to resolve overlapping proton signals by correlating them to their attached carbons.	

© 2026 BenchChem. All rights reserved.

FAQ 2: I'm observing unexpected downfield shifts for the aromatic protons ortho to the amino group. Is this normal?

Answer: Yes, this is a known phenomenon. While the amino group is typically electron-donating, leading to an upfield shift of ortho and para protons, significant steric hindrance can alter this. The bulky groups can force the amino group out of the plane of the aromatic ring, disrupting the resonance delocalization of the nitrogen lone pair into the ring.[1] This reduces the electron-donating effect and can lead to a relative deshielding (downfield shift) of the ortho protons compared to less hindered anilines.

Workflow for Structural Elucidation of a Novel Sterically Hindered Aniline using 2D NMR

For unambiguous structural confirmation, a combination of 2D NMR experiments is often essential.

© 2026 BenchChem. All rights reserved.

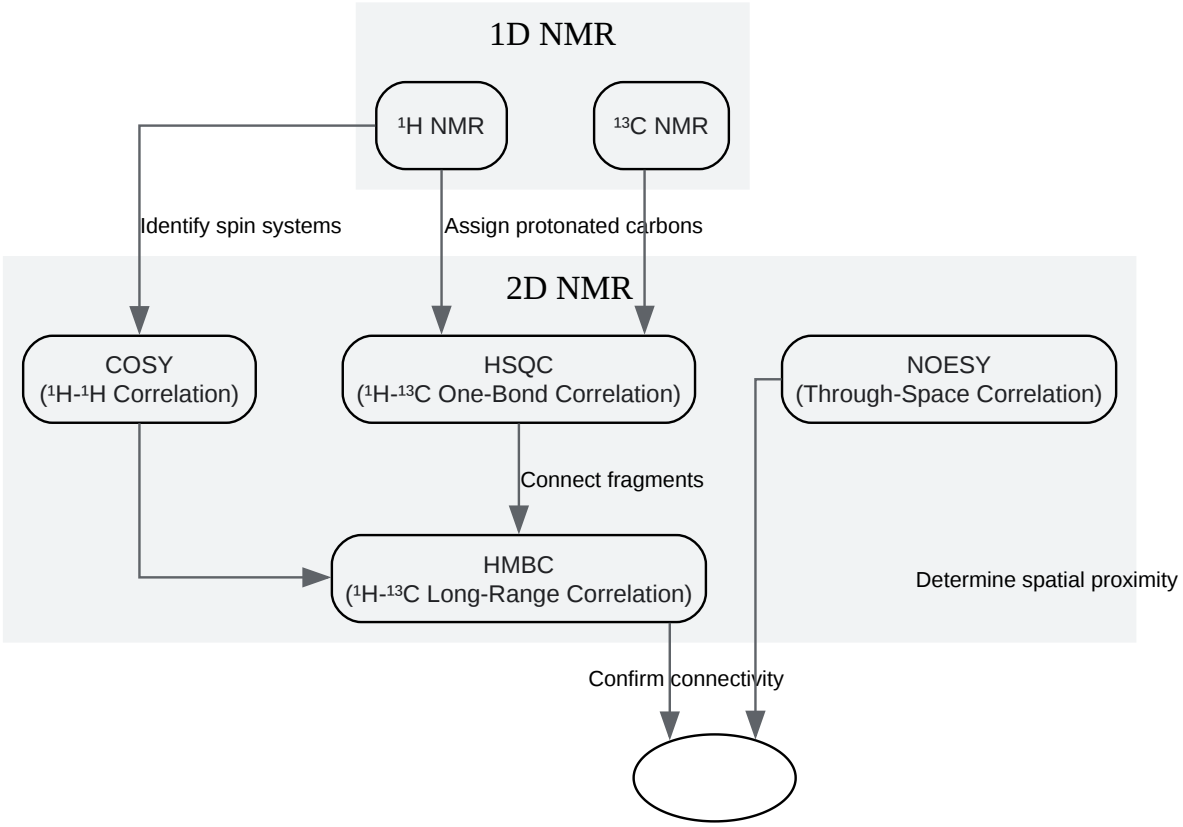

Click to download full resolution via product page

Caption: Workflow for 2D NMR structural elucidation.

Section 2: Mass Spectrometry (MS) Challenges

The analysis of sterically hindered anilines by mass spectrometry can be complicated by their unique fragmentation patterns and ionization behavior.

FAQ 3: My sterically hindered aniline gives a very weak or absent molecular ion peak in the mass spectrum. Why is this happening?

Answer: A weak or absent molecular ion peak is a common issue, particularly with "hard" ionization techniques like Electron Impact (EI). The bulky substituents can create a sterically strained molecular ion that readily undergoes fragmentation. The fragmentation is often

© 2026 BenchChem. All rights reserved.

dominated by the loss of the bulky alkyl groups, leading to a base peak at a much lower m/z and a diminished molecular ion.

Troubleshooting Guide: Weak or Absent Molecular Ion in MS

Symptom	Potential Cause	Troubleshooting Steps & Rationale
Weak or absent molecular ion peak	Excessive fragmentation with hard ionization	1. Use a "Soft" Ionization Technique: Employ techniques like Electrospray Ionization (ESI) or Chemical Ionization (CI).[7] These methods impart less energy to the analyte, promoting the formation of the protonated molecule ($[M+H]^+$) with reduced fragmentation. For very large or thermally labile compounds, Matrix-Assisted Laser Desorption/Ionization (MALDI) can also be considered.[7][8]
Poor ionization efficiency	1. Optimize ESI Source Conditions: Adjust parameters such as spray voltage, capillary temperature, and solvent flow rate. The choice of solvent can also significantly impact ionization efficiency. 2. Consider Derivatization: Chemically modifying the amino group can improve its ionization characteristics.	

© 2026 BenchChem. All rights reserved.

FAQ 4: The fragmentation pattern of my bulky aniline is complex and difficult to interpret. Are there any predictable fragmentation pathways?

Answer: While complex, some general fragmentation patterns can be anticipated for aromatic amines.[9][10][11] The most common fragmentation is the cleavage of the bond beta to the aromatic ring within the bulky substituent. Loss of the entire bulky group is also a prominent pathway. For anilines, the loss of HCN from the aromatic ring can also be observed.[11] However, the presence of large, branched alkyl groups can lead to rearrangements and multiple fragmentation pathways, complicating spectral interpretation.

Section 3: Chromatographic Separation Challenges (HPLC & GC)

The polarity and potential for secondary interactions make the chromatographic separation of sterically hindered anilines a significant hurdle.

FAQ 5: I'm observing severe peak tailing when analyzing my sterically hindered aniline by reverse-phase HPLC. What is the cause and how can I fix it?

Answer: Peak tailing is a very common problem when analyzing basic compounds like anilines on silica-based reverse-phase columns.[12][13] The primary cause is the interaction of the basic amino group with acidic residual silanol groups on the silica surface.[12][13] This secondary interaction leads to a portion of the analyte being more strongly retained, resulting in a tailed peak.

Troubleshooting Guide: HPLC Peak Tailing of Sterically Hindered Anilines

© 2026 BenchChem. All rights reserved.

Symptom	Potential Cause	Troubleshooting Steps & Rationale
Tailing peaks in RP-HPLC	Secondary interactions with residual silanols	1. Adjust Mobile Phase pH: Lowering the pH of the mobile phase (e.g., to pH 2.5-3 with formic acid or TFA) will protonate the silanol groups, reducing their interaction with the basic analyte.[12] 2. Use a "Base-Deactivated" Column: Employ a column specifically designed for the analysis of basic compounds. These columns have a lower concentration of residual silanols or are end-capped to minimize these interactions.[8][14][15][16] 3. Add a Competing Base: Incorporate a small amount of a competing amine, such as triethylamine (TEA), into the mobile phase. TEA will preferentially interact with the active silanol sites, reducing their availability to the analyte.
Column Overload	1. Reduce Injection Volume/Concentration: Injecting too much sample can saturate the stationary phase. Dilute the sample or reduce the injection volume.[13]	
Poorly chosen stationary phase	1. Phenyl Stationary Phases: For aromatic compounds, a phenyl-based stationary phase can provide alternative	

© 2026 BenchChem. All rights reserved.

selectivity through π-π interactions and may offer better peak shape.[15][16]

Diagram: The "Vicious Cycle" of Peak Tailing in HPLC

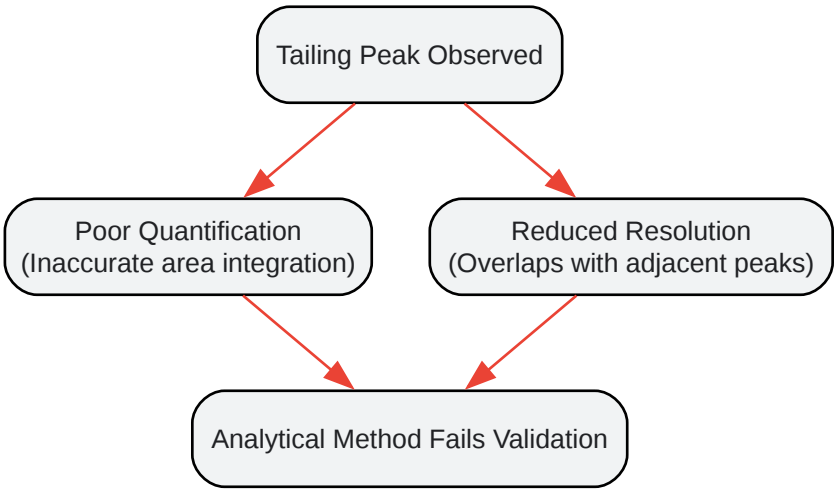

Click to download full resolution via product page

Caption: Consequences of unresolved peak tailing.

FAQ 6: Can I analyze my sterically hindered aniline by Gas Chromatography (GC)? It seems to be giving poor results.

Answer: Direct analysis of sterically hindered anilines by GC can be challenging. Their polarity can lead to poor peak shape and interactions with the GC column.[1] Furthermore, many of these compounds have high boiling points and may not be sufficiently volatile for GC analysis without thermal degradation.

Solution Spotlight: Derivatization for GC and HPLC Analysis

Derivatization is a powerful strategy to overcome many of the challenges associated with the analysis of sterically hindered anilines.[17][18] By chemically modifying the polar amino group, we can:

© 2026 BenchChem. All rights reserved.

- Increase Volatility for GC: Converting the -NH_2 group to a less polar derivative (e.g., an amide or a silyl derivative) lowers the boiling point and improves thermal stability.[1]
- Improve Peak Shape in GC and HPLC: By masking the polar amino group, derivatization reduces interactions with active sites in the GC system and residual silanols in HPLC columns.[1]
- Enhance Detection: Derivatization can introduce a chromophore or fluorophore, significantly increasing the sensitivity of UV or fluorescence detection in HPLC.

Protocol: Silylation of a Sterically Hindered Aniline for GC-MS Analysis

This protocol describes a general procedure for the silylation of a sterically hindered aniline using BSTFA with TMCS as a catalyst.

Materials:

- Sterically hindered aniline sample
- N,O-Bis(trimethylsilyl)trifluoroacetamide (BSTFA) with 1% Trimethylchlorosilane (TMCS)
- Anhydrous solvent (e.g., pyridine, acetonitrile, or dichloromethane)
- Reaction vial with a screw cap and PTFE-lined septum
- Heating block or oven

Procedure:

- Sample Preparation: Accurately weigh approximately 1-5 mg of the sterically hindered aniline into a clean, dry reaction vial.
- Solvent Addition: Add 200-500 µL of the anhydrous solvent to dissolve the sample.
- Reagent Addition: Add a 2-5 fold molar excess of the BSTFA + 1% TMCS reagent to the vial.

© 2026 BenchChem. All rights reserved.

- Reaction: Tightly cap the vial and heat at 60-80 °C for 30-60 minutes. The reaction time and temperature may need to be optimized depending on the steric hindrance of the aniline.
- Cooling: Allow the vial to cool to room temperature.
- Analysis: The derivatized sample is now ready for injection into the GC-MS system.

Note: Always perform a blank reaction (reagents and solvent only) to identify any potential interfering peaks.

References

- 13C-NMR Based Evaluation of the Electronic and Steric Interactions in Aromatic Amines. (n.d.). MDPI. Retrieved January 17, 2026, from [Link]
- Lewis, R. G., & Dyer, D. S. (1968). AN NMR STUDY OF THE SOLVENT EFFECTS ON THE N-H CHEMICAL SHIFTS OF AROMATIC AMINES, AMIDES, AND HYDRAZINES.
- Element Lab Solutions. (n.d.). Peak Tailing in HPLC. Retrieved January 17, 2026, from [Link]
- Request PDF. (n.d.). Variable Temperature NMR Experiment Studying Restricted Bond Rotation. Retrieved January 17, 2026, from [Link]
- HPLC Troubleshooting Guide. (n.d.). Retrieved January 17, 2026, from [Link]
- Imtakt USA. (2024, June 27). HPLC - Troubleshooting Tailing [Video]. YouTube. [Link]
- BenchChem. (2025).
- Chromtech. (n.d.). HPLC Column Selection Guide. Retrieved January 17, 2026, from [Link]
- The 13C NMR chemical shift values (d ppm) of aniline and 2-butylthioaniline in DMSO- d 6. (n.d.). ResearchGate. Retrieved January 17, 2026, from [Link]
- Derivatization Reactions and Reagents for Gas Chromatography Analysis. (2012, March 21). SciSpace. [Link]
- Agilent. (n.d.). Tips and Tricks of HPLC System Troubleshooting. Retrieved January 17, 2026, from [Link]

© 2026 BenchChem. All rights reserved.

- LCGC International. (2013, May 1). HPLC Column Selection. [Link]
- Chromtech. (n.d.). HPLC Columns. Retrieved January 17, 2026, from [Link]
- Phenomenex. (n.d.). Choosing the Right HPLC Column: A Complete Guide. Retrieved January 17, 2026, from [Link]
- Greyhound Chromatography. (n.d.). Derivatization Reagents - For Selective Response and Detection in Complex Matrices. Retrieved January 17, 2026, from [Link]
- BenchChem. (2025). Application Notes and Protocols for the Analysis of Substituted Anilines by HPLC and GC-MS.
- Chemistry LibreTexts. (2023, February 11). 2.3: Ionization Techniques. [Link]
- Park, S. U., et al. (2003). Effect of Steric Hindrance on Carbon Dioxide Absorption Into New Amine Solutions: Thermodynamic and Spectroscopic Verification Through Solubility and NMR Analysis. Environmental Science & Technology, 37(8), 1670-1675. [Link]
- Comparison of gas- and liquid chromatography-mass spectrometry for trace analysis of anilines in groundwater. (2021).
- Variable Temperature NMR Experiments. (2018). University of Oxford.
- (PDF) Derivatization reactions and reagents for gas chromatography analysis. (n.d.). Retrieved January 17, 2026, from [Link]
- Whitman People. (n.d.). GCMS Section 6.15. Retrieved January 17, 2026, from [Link]
- Scribd. (n.d.). Mass Spectrometry: Fragmentation Patterns. Retrieved January 17, 2026, from [Link]
- Spectroscopic Studies of Some Organic Compounds: Solvent Effects on 1H NMR Shift of Amine Proton of Morpholine. (2009).
- S. P. (2010). Computational Analysis of Solvent Effects in NMR Spectroscopy. PubMed.
- Comparison of gas- and liquid chromatography- mass spectrometry for trace analysis of anilines in groundw
- Comparison of gas- and liquid chromatography- mass spectrometry for trace analysis of anilines in groundw

© 2026 BenchChem. All rights reserved.

- Mass Spectrometry: Fragmentation. (n.d.). Retrieved January 17, 2026, from [Link]

- Supporting Information for The Investigation of the Steric Hindrance of Anilines by Means of Reactions with PCl3 and BCl3 Vlasti. (n.d.).
- Solvent effects on the nuclear magnetic resonance spectra of arom
- Simultaneous determination of isomeric substituted anilines by imidization with benzaldehyde and GC-MS. (2016).
- (PDF) Chiral Separations by High-Performance Liquid Chromatography. (n.d.).
- A Strategy for Developing HPLC Methods for Chiral Drugs. (2014).
- Investigation on the binary ionization choices for large conjugated amines during electrospray ioniz
- 13C-NMR of aniline: Why are carbons that are further from the amine group more downfield than carbons that are closer? (2020). Chemistry Stack Exchange.
- Hindered Rotations of Protein Asparagine/Glutamine Side-Chain NH2 Groups: Impact of Hydrogen-Bonding with DNA. (2022). PMC.
- High performance liquid chromatography (HPLC) chiral separation based... (n.d.).
- Variable-temperature NMR spectroscopy for metabolite identification in biological materials. (2021).
- Hindered Rotation in N-Carbomethoxylated Indole Deriv
- Fragmentation (mass spectrometry). (n.d.). Wikipedia.
- Palladium-Catalyzed Asymmetric Oxidative Amination of Internal α,β-Unsaturated Esters with Lewis Basic Amines. (2026). Journal of the American Chemical Society.
- Recent Advances in Separation and Analysis of Chiral Compounds. (2023). Analytical Chemistry.
- Electrochemical polymerization of aniline investigated using on-line electrochemistry/electrospray mass spectrometry. (2002). PubMed.
- "DEVELOPMENT AND CHARACTERIZATION OF ELECTROSPRAY IONIZATION MODES IN M" by Huishan Li. (2024). UNH Scholars Repository.
- The Influence of Steric Effect on X H NMR, 13 C NMR, and IR Spectra of Methylated Derivatives of 4-Nitropyridine iV-Oxide. (n.d.). Chemical Papers.
- Facile Improvement of Negative Ion Mode Electrospray Ionization Using Capillary Vibrating Sharp-Edge Spray Ioniz

Need Custom Synthesis?

BenchChem offers custom synthesis for rare earth carbides and specific isotopiclabeling.

Email: info@benchchem.com or Request Quote Online.

Sources

- 1. mdpi.com [mdpi.com]
- 2. researchgate.net [researchgate.net]
- 3. nmr.chem.ox.ac.uk [nmr.chem.ox.ac.uk]
- 4. Hindered Rotation in N-Carbomethoxylated Indole Derivatives [scielo.org.mx]
- 5. apps.dtic.mil [apps.dtic.mil]
- 6. researchgate.net [researchgate.net]
- 7. sigmaaldrich.com [sigmaaldrich.com]
- 8. Choosing the Right HPLC Column: A Complete Guide | Phenomenex [phenomenex.com]
- 9. GCMS Section 6.15 [people.whitman.edu]
- 10. scribd.com [scribd.com]
- 11. chemistry.miamioh.edu [chemistry.miamioh.edu]
- 12. elementlabsolutions.com [elementlabsolutions.com]
- 13. pdf.benchchem.com [pdf.benchchem.com]
- 14. chromtech.net.au [chromtech.net.au]
- 15. chromatographyonline.com [chromatographyonline.com]
- 16. chromtech.net.au [chromtech.net.au]
- 17. The Use of Derivatization Reagents for Gas Chromatography (GC) [sigmaaldrich.com]
- 18. greyhoundchrom.com [greyhoundchrom.com]

- To cite this document: BenchChem. [Technical Support Center: Navigating the Complexities of Sterically Hindered Aniline Characterization]. BenchChem, [2026]. [Online PDF]. Available at: [https://www.benchchem.com/product/b1336726/docs#technical-support-center-navigating-the-complexities-of-sterically-hindered-aniline-characterization]

Disclaimer & Data Validity:

The information provided in this document is for Research Use Only (RUO) and is strictly not intended for diagnostic or therapeutic procedures. While BenchChem strives to provide accurate protocols, we make no warranties, express or implied, regarding the fitness of this product for every specific experimental setup.

© 2026 BenchChem. All rights reserved.

Technical Support: The protocols provided are for reference purposes. Unsure if this reagent suits your experiment?

Need Industrial/Bulk Grade? Request Custom Synthesis Quote

BenchChem

Our mission is to be the trusted global source of essential and advanced chemicals, empowering scientists and researchers to drive progress in science and industry.

Contact

Address: 3281 E Guasti Rd

Ontario, CA 91761, United States

Phone: (601) 213-4426

Email: info@benchchem.com

Contact our Ph.D. Support Team for a compatibility check

© 2026 BenchChem. All rights reserved.