Technical Support Center: Navigating GW 501516 (Cardarine) Data Analysis

Author: BenchChem Technical Support Team. **Date**: April 2026

Compound of Interest

Compound Name:	*GW 590735*
CAS No.:	*343321-96-0*
Cat. No.:	*B1336410*

Get Quote

A word of caution: The compound **GW 590735**, as specified in the topic, is not extensively documented in scientific literature. It is highly probable that this is a typographical error for the well-researched peroxisome proliferator-activated receptor delta (PPARδ) agonist, GW 501516, also known as Cardarine. This guide will proceed under the assumption that the intended compound of interest is GW 501516.

For Research Professionals: This technical support guide is designed for researchers, scientists, and drug development professionals. It provides in-depth troubleshooting advice, frequently asked questions (FAQs), and detailed experimental protocols to help avoid common pitfalls in the analysis of data generated from experiments involving GW 501516.

Troubleshooting Guides

This section addresses specific issues that may arise during experimentation and data analysis with GW 501516.

© 2026 BenchChem. All rights reserved.

Problem	Potential Cause	Recommended Solution
Inconsistent or weak cellular response to GW 501516	Compound Degradation: Improper storage can lead to loss of activity.	Store GW 501516 as a powder at -20°C. For stock solutions in DMSO, store at -20°C in small aliquots to avoid repeated freeze-thaw cycles.
Low PPARδ Expression in Cell Line: The cell line used may not express sufficient levels of the PPARδ receptor.	Confirm PPARδ expression in your chosen cell line via qPCR or Western blot before initiating experiments. Consider using cell lines known to have robust PPARδ expression (e.g., HepG2, C2C12 myotubes, or THP-1 macrophages).	
Suboptimal Concentration or Incubation Time: The concentration of GW 501516 or the duration of treatment may be insufficient to elicit a significant response.	Perform a dose-response and time-course experiment to determine the optimal conditions for your specific cell line and assay.	
Precipitation of GW 501516 in cell culture media	Poor Aqueous Solubility: GW 501516 is hydrophobic and can precipitate when diluted in aqueous media.[1]	Prepare a high-concentration stock solution in 100% DMSO.[2] When preparing working solutions, add the DMSO stock to pre-warmed (37°C) media and mix thoroughly to ensure rapid dispersal.[1][3] The final DMSO concentration in the culture should be kept below 0.5% to minimize solvent toxicity.[1]
Interaction with Media Components: Components in serum or media supplements can sometimes interact with	If using serum-free media, ensure all components are added in the correct order as specified by the manufacturer.	

© 2026 BenchChem. All rights reserved.

the compound, causing it to precipitate.[3]	Consider performing a solubility test of GW 501516 in your specific media formulation.	
High variability in qPCR data for target genes	Inappropriate Housekeeping Gene Selection: The expression of commonly used housekeeping genes may be affected by GW 501516 treatment, leading to inaccurate normalization.	Validate a panel of potential housekeeping genes to identify those with the most stable expression across your experimental conditions. Do not assume that common housekeeping genes (e.g., GAPDH, β-actin) are unaffected by treatment.
Poor RNA Quality or Reverse Transcription Efficiency: Inconsistent RNA quality or reverse transcription can introduce significant variability.	Assess RNA integrity (e.g., using a Bioanalyzer) before proceeding with cDNA synthesis. Use a high-quality reverse transcription kit and ensure consistent input RNA amounts across all samples.	
Unexpected or off-target effects observed	Activation of other PPAR isoforms: Although highly selective for PPARδ, at very high concentrations, GW 501516 may exhibit some activity on PPARα and PPARγ.[4]	Use the lowest effective concentration of GW 501516 as determined by your dose-response experiments. To confirm that the observed effects are PPARδ-mediated, consider using a PPARδ antagonist (e.g., GSK0660) in control experiments.[5]
Activation of AMPK Pathway: Some effects of GW 501516 may be mediated through the AMP-activated protein kinase (AMPK) pathway.[5][6]	When investigating the mechanism of action, consider including experiments to assess the phosphorylation status of AMPK and its downstream targets.	

© 2026 BenchChem. All rights reserved.

Frequently Asked Questions (FAQs)

General Compound Information

Q1: What is the mechanism of action of GW 501516?

A1: GW 501516 is a potent and selective agonist of the peroxisome proliferator-activated receptor delta (PPARδ).[4] Upon binding, it forms a heterodimer with the retinoid X receptor (RXR), which then binds to specific DNA sequences known as peroxisome proliferator response elements (PPREs) in the promoter region of target genes. This complex recruits coactivators, such as PGC-1α, leading to the upregulation of genes involved in fatty acid metabolism, energy expenditure, and mitochondrial biogenesis.[4][5]

Q2: What are the known off-target effects of GW 501516?

A2: While GW 501516 is over 1,000-fold more selective for PPARδ than for PPARα and PPARγ, cross-reactivity can occur at high concentrations.[4] Additionally, some of its metabolic effects are linked to the activation of the AMPK pathway.[5][6] It's crucial to be aware of the controversial safety profile of GW 501516, as animal studies have linked it to an increased risk of cancer.[4][5]

Experimental Design and Protocols

Q3: What are typical working concentrations and incubation times for in vitro experiments?

A3: The optimal concentration and incubation time are highly dependent on the cell line and the specific assay. However, a general starting point for dose-response experiments is a range from 1 nM to 10 µM. Incubation times can vary from a few hours for signaling pathway studies to 24-72 hours for gene expression and metabolic assays.

Q4: How should I prepare my stock solution of GW 501516?

A4: GW 501516 is poorly soluble in water but soluble in organic solvents like DMSO.[2] It is recommended to prepare a high-concentration stock solution (e.g., 10-50 mM) in 100% DMSO. Store this stock solution in small, single-use aliquots at -20°C to avoid repeated freeze-thaw cycles.

© 2026 BenchChem. All rights reserved.

Data Analysis and Interpretation

Q5: How do I normalize my qPCR data when analyzing the expression of GW 501516 target genes?

A5: Proper normalization is critical for accurate qPCR data. It is essential to validate a set of candidate housekeeping genes to find the one(s) with the most stable expression across your treatment groups. Do not rely on a single, unvalidated housekeeping gene. The geNorm or NormFinder algorithms can be useful tools for identifying the most stable reference genes from a panel.

Q6: How can I confirm that the observed effects are specifically mediated by PPARδ?

A6: To confirm PPARδ-specific effects, you can perform several control experiments:

- Use a PPARδ antagonist: Co-treatment with a specific PPARδ antagonist, such as GSK0660, should reverse the effects of GW 501516.[5]
- Use a PPARδ knockdown or knockout model: Silencing the expression of PPARδ using siRNA or using cells from a PPARδ knockout animal should abrogate the response to GW 501516.
- Compare with other PPAR agonists: Compare the effects of GW 501516 with those of selective agonists for PPARα (e.g., GW7647) and PPARγ (e.g., rosiglitazone) to demonstrate isoform specificity.

Quantitative Data Summary

The following tables provide a summary of quantitative data for GW 501516 from various in vitro and in vivo studies.

Table 1: In Vitro Efficacy of GW 501516 in Various Cell-Based Assays

© 2026 BenchChem. All rights reserved.

Cell Line	Assay Type	EC50	Typical Concentration Range	Typical Incubation Time	Reference
Multiple	PPARδ Reporter Assay	~1 nM	0.1 nM - 1 µM	18-24 hours	[4]
Human Myotubes	Oleic Acid Oxidation	~3.7 nM	1 nM - 100 nM	24 hours	[7]
HepG2	PPARδ Reporter Assay	Not specified	10 nM - 1 µM	24 hours	[8]
C2C12 Myotubes	Fatty Acid Oxidation	Not specified	100 nM - 1 µM	4-24 hours	N/A
THP-1 Macrophages	Gene Expression (e.g., CPT1A)	Not specified	100 nM - 1 µM	24 hours	N/A

Table 2: Recommended Starting Concentrations for In Vitro Experiments

© 2026 BenchChem. All rights reserved.

Experiment Type	Suggested Starting Concentration	Rationale
PPARδ Reporter Assay	100 nM	Typically sufficient for maximal activation of the reporter gene.
Gene Expression (qPCR)	100 nM - 500 nM	This range is often effective for inducing the expression of PPARδ target genes.
Metabolic Assays (e.g., fatty acid oxidation)	100 nM - 1 µM	Higher concentrations may be required to observe significant changes in metabolic flux.
Signaling Pathway Analysis (e.g., AMPK phosphorylation)	100 nM - 1 µM	A sufficient concentration to induce downstream signaling events.

Detailed Experimental Protocols

Protocol 1: PPARδ Reporter Gene Assay

Objective: To quantify the activation of the PPARδ receptor by GW 501516.

Methodology:

- Cell Seeding: Seed cells (e.g., HepG2) in a 96-well plate at a density that will result in 70-80% confluency at the time of transfection.
- Transfection: Co-transfect the cells with a PPARδ expression vector, a PPRE-driven luciferase reporter vector, and a control vector (e.g., Renilla luciferase) for normalization.
- Treatment: After 24 hours, replace the media with fresh media containing various concentrations of GW 501516 (e.g., 0.1 nM to 1 µM) or a vehicle control (DMSO).
- Incubation: Incubate the cells for 18-24 hours.
- Lysis and Luciferase Assay: Lyse the cells and measure both firefly and Renilla luciferase activity using a dual-luciferase reporter assay system.

© 2026 BenchChem. All rights reserved.

- Data Analysis: Normalize the firefly luciferase activity to the Renilla luciferase activity. Plot the normalized luciferase activity against the log of the GW 501516 concentration and fit the data to a four-parameter logistic equation to determine the EC50 value.

Protocol 2: Quantitative PCR (qPCR) for PPARδ Target Gene Expression

Objective: To measure the effect of GW 501516 on the expression of PPARδ target genes (e.g., PDK4, ANGPTL4, CPT1A).

Methodology:

- Cell Seeding and Treatment: Seed cells (e.g., C2C12 myotubes) in a 6-well plate and allow them to differentiate. Treat the cells with the desired concentration of GW 501516 or vehicle control for 24 hours.
- RNA Isolation: Isolate total RNA from the cells using a commercially available kit. Assess RNA quality and quantity.
- cDNA Synthesis: Synthesize cDNA from 1 µg of total RNA using a reverse transcription kit.
- qPCR: Perform qPCR using SYBR Green or TaqMan chemistry with primers specific for your target genes and validated housekeeping genes.
- Data Analysis: Calculate the relative gene expression using the ΔΔCt method, normalizing the expression of the target gene to the geometric mean of the most stable housekeeping genes.

Mandatory Visualizations

Signaling Pathway Diagram

© 2026 BenchChem. All rights reserved.

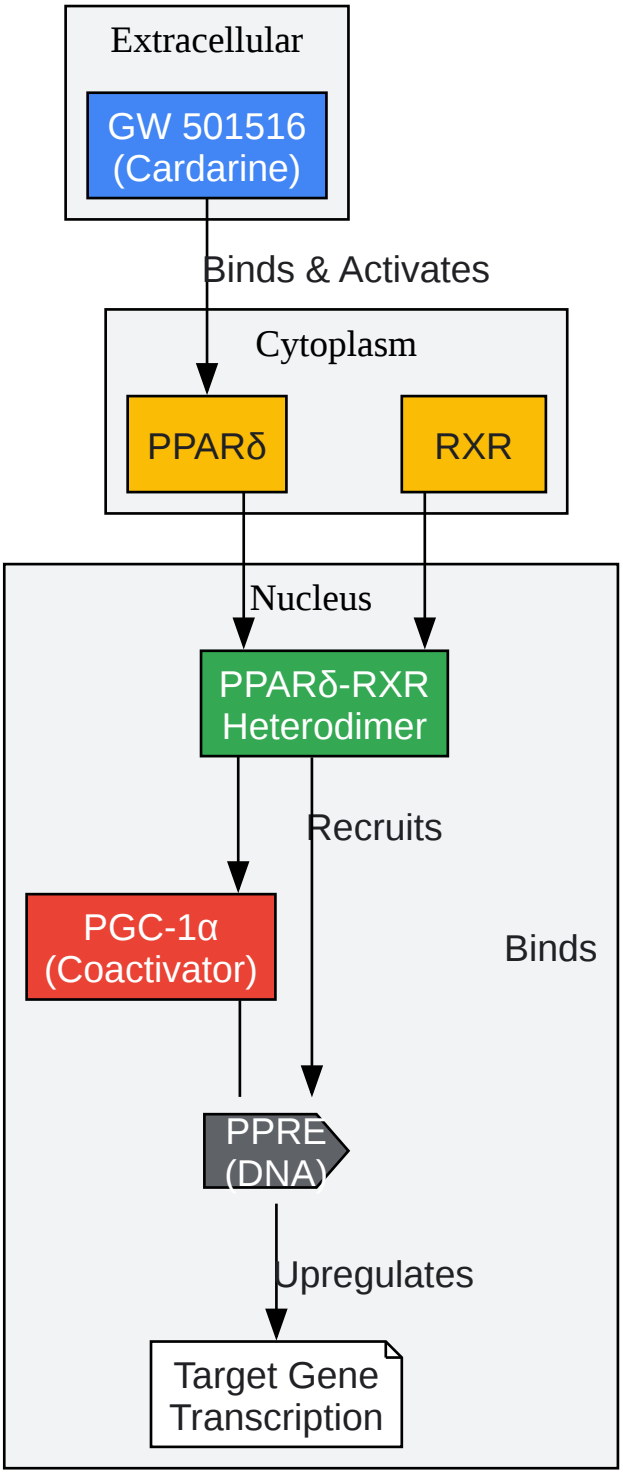

Click to download full resolution via product page

Caption: Signaling pathway of GW 501516 activation of PPARδ.

© 2026 BenchChem. All rights reserved.

Experimental Workflow Diagram

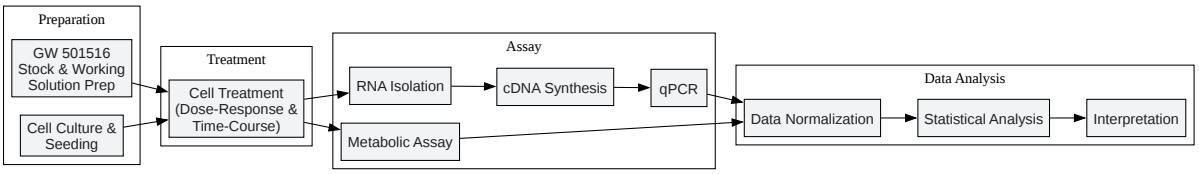

Click to download full resolution via product page

Caption: A typical experimental workflow for studying GW 501516.

Troubleshooting Logic Diagram

© 2026 BenchChem. All rights reserved.

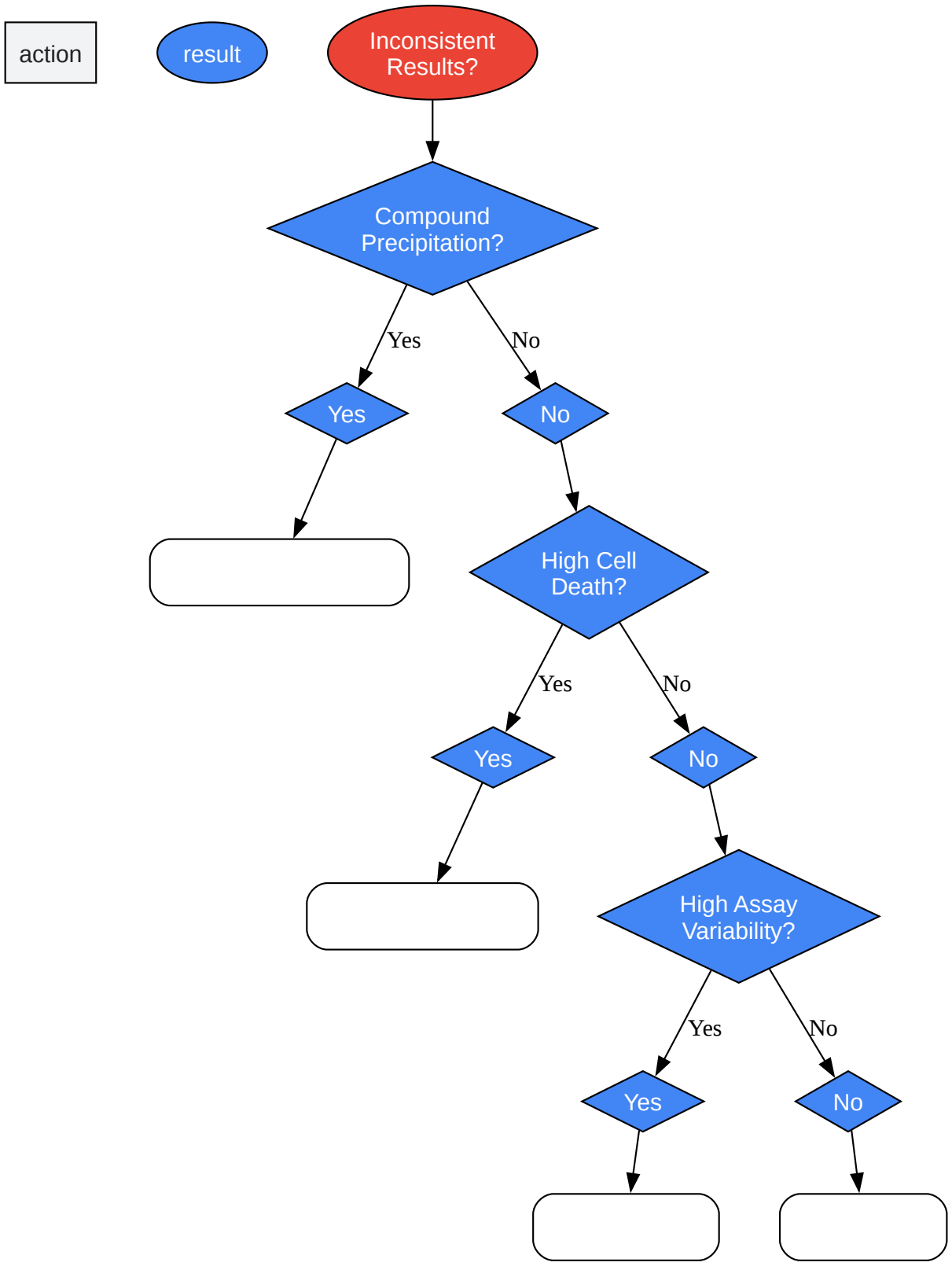

Click to download full resolution via product page

Caption: A logical approach to troubleshooting inconsistent results.

© 2026 BenchChem. All rights reserved.

Need Custom Synthesis?

BenchChem offers custom synthesis for rare earth carbides and specific isotopiclabeling.

Email: info@benchchem.com or Request Quote Online.

References

- 1. benchchem.com [benchchem.com]
- 2. selleckchem.com [selleckchem.com]
- 3. benchchem.com [benchchem.com]
- 4. GW501516 - Wikipedia [en.wikipedia.org]
- 5. scivisionpub.com [scivisionpub.com]
- 6. The PPARβ/δ activator GW501516 prevents the down-regulation of AMPK caused by a high-fat diet in liver and amplifies the PGC-1α-Lipin 1-PPARα pathway leading to increased fatty acid oxidation - PubMed [pubmed.ncbi.nlm.nih.gov]
- 7. read.qxmd.com [read.qxmd.com]
- 8. researchgate.net [researchgate.net]

- To cite this document: BenchChem. [Technical Support Center: Navigating GW 501516 (Cardarine) Data Analysis]. BenchChem, [2026]. [Online PDF]. Available at: [https://www.benchchem.com/product/b1336410/docs#technical-support-center-navigating-gw-501516-cardarine-data-analysis]

Disclaimer & Data Validity:

The information provided in this document is for Research Use Only (RUO) and is strictly not intended for diagnostic or therapeutic procedures. While BenchChem strives to provide accurate protocols, we make no warranties, express or implied, regarding the fitness of this product for every specific experimental setup.

Technical Support: The protocols provided are for reference purposes. Unsure if this reagent suits your experiment?

Need Industrial/Bulk Grade? Request Custom Synthesis Quote

© 2026 BenchChem. All rights reserved.

BenchChem

Our mission is to be the trusted global source of essential and advanced chemicals, empowering scientists and researchers to drive progress in science and industry.

Contact

Address: 3281 E Guasti Rd

Ontario, CA 91761, United States

Phone: (601) 213-4426

Email: info@benchchem.com

Contact our Ph.D. Support Team for a compatibility check

© 2026 BenchChem. All rights reserved.