Technical Monograph: Spectral Characterization of 2,3-Dimethoxybenzoyl Chloride

Author: BenchChem Technical Support Team. **Date**: February 2026

Compound of Interest		
Compound Name:	*2,3-Dimethoxybenzoyl chloride*	
CAS No.:	*7169-06-4*	
Cat. No.:	*B1334118*	*Get Quote*

CAS: 18342-54-6 | Formula: $C_9H_9ClO_3$ | MW: 200.62 g/mol [1]

Executive Summary & Application Context

2,3-Dimethoxybenzoyl chloride is a high-reactivity electrophile used primarily as a benzoylation agent in the synthesis of substituted benzamides (e.g., dopamine D2/D3 antagonists).[1] Its structural integrity is defined by the steric crowding of the ortho-methoxy group and the high lability of the acyl chloride moiety.

Critical Handling Note: This compound is moisture-sensitive.[1] Hydrolysis reverts it to 2,3-dimethoxybenzoic acid (CAS 1521-38-6) within minutes in ambient air.[1] The spectral data presented below includes specific "contamination markers" to detect this degradation.

Synthesis & Quality Control Workflow

To ensure spectral validity, the compound is typically synthesized in situ or freshly isolated via the thionyl chloride method.

Protocol: Conversion from 2,3-Dimethoxybenzoic Acid[1]

- Reagents: 2,3-Dimethoxybenzoic acid (1.0 eq), Thionyl Chloride ($SOCl_2$, 1.5 eq), catalytic DMF (1-2 drops).

© 2026 BenchChem. All rights reserved.

- Conditions: Reflux in anhydrous Toluene or DCM for 2–3 hours.
- Purification: Removal of solvent and excess $SOCl_2$ under high vacuum.[1] Do not perform aqueous workup.[1]

QC Logic Diagram

The following workflow illustrates the critical decision points for validating the material before use in downstream coupling.

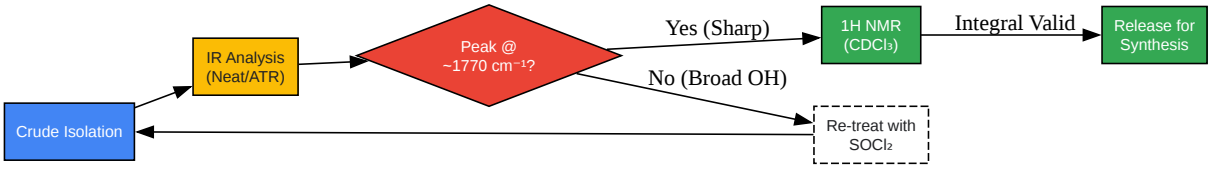

Click to download full resolution via product page

Figure 1: Quality control decision tree emphasizing the priority of IR for rapid hydrolysis detection.

Infrared Spectroscopy (FT-IR)

Role: Primary "Reaction Monitor." IR is the fastest method to distinguish the chloride from the parent acid.

The conversion of the carboxylic acid to the acid chloride results in a significant frequency shift of the carbonyl stretch due to the inductive electron-withdrawing effect of the chlorine atom (raising the bond order) and the loss of hydrogen bonding.

© 2026 BenchChem. All rights reserved.

Functional Group	Frequency (cm^{-1})	Morphology	Diagnostic Note
C=O[1][2][3][4] (Acyl Chloride)	1765 – 1785	Sharp, Strong	Primary Marker. Distinctly higher than the acid precursor (~1680 cm^{-1}).[1]
C-H (Aromatic)	3000 – 3100	Weak	Standard aromatic stretch.[1]
C-H (Methoxy)	2830 – 2960	Medium	Characteristic methyl C-H stretches.[1]
C-O (Ether)	1260 – 1280	Strong	Aryl-alkyl ether stretch.[1]
-OH (Contaminant)	2500 – 3300	Broad	Failure Mode. Presence indicates hydrolysis to benzoic acid.[1]

Application Insight: If a broad hump is visible >3000 cm^{-1} or a secondary carbonyl peak appears ~1680 cm^{-1}, the batch contains significant hydrolyzed acid and must be re-chlorinated.

Nuclear Magnetic Resonance (NMR)

Role: Structural Confirmation and Regiochemistry.[1] Solvent: $CDCl_3$ (Must be anhydrous; neutralize with basic alumina if acidity is a concern).[1] Avoid DMSO-d_6 as it can react with acid chlorides or contain residual water that hydrolyzes the sample during acquisition.[1]

^{1}H NMR (400 MHz, $CDCl_3$)

The 2,3-substitution pattern creates a specific splitting pattern for the three aromatic protons (H4, H5, H6).[1]

© 2026 BenchChem. All rights reserved.

Position	Shift (δ ppm)	Multiplicity	Integration	Assignment Logic
H-6	7.55 – 7.65	dd (Doublet of Doublets)	1H	Deshielded. Ortho to the electron-withdrawing C(=O)Cl group.[1]
H-4	7.10 – 7.20	dd	1H	Para to C(=O)Cl; adjacent to OMe (shielding effect).[1]
H-5	7.00 – 7.10	t (apparent) or dd	1H	Meta to C(=O)Cl; flanked by OMe and H-4/H-6.[1]
$-OCH_3$ (C2)	3.88 – 3.92	s (Singlet)	3H	Ortho to Carbonyl (sterically crowded).[1]
$-OCH_3$ (C3)	3.85 – 3.89	s (Singlet)	3H	Meta to Carbonyl.[1]

Coupling Constants (J):

- $J_{4,5} \approx 8.0$ Hz (Ortho coupling)
- $J_{5,6} \approx 8.0$ Hz (Ortho coupling)
- $J_{4,6} \approx 1.5$ Hz (Meta coupling)

^{13}C NMR (100 MHz, $CDCl_3$)

- Carbonyl (C=O): ~165 ppm (Distinctly upfield from acid carbonyls ~170+ due to Cl shielding/anisotropy).[1]

© 2026 BenchChem. All rights reserved.

- Aromatic C-O: ~148 ppm and ~153 ppm (C2 and C3).[1]
- Methoxy Carbons: ~56 ppm and ~61 ppm.[1]

Mass Spectrometry (MS)

Role: Identity Validation via Isotope Pattern. Technique: GC-MS (EI, 70 eV) or LC-MS (requires derivatization with methanol to form methyl ester, as acid chlorides hydrolyze on LC columns).[1]

Direct Injection (EI) Fragmentation Pathway

The mass spectrum is dominated by the stability of the acylium ion and the characteristic chlorine isotope signature.

m/z (Ion)	Intensity	Species	Mechanism
200 / 202	Weak/Med	$[M]^+$	Molecular ion.[1] Shows 3:1 ratio (^{35}Cl:^{37}Cl).[1][5]
165	Base Peak (100%)	$[M - Cl]^+$	Acylium Ion. Loss of Cl radical.[1] Highly stable due to resonance from OMe groups.[1]
122	Medium	$[M - Cl - CO - Me]^+$	Loss of Carbon Monoxide and Methyl radical.[1]
77	Medium	$[C_6H_5]^+$	Phenyl cation (rearrangement).[1]

Fragmentation Logic Diagram

The following diagram details the cleavage pathway observed in Electron Impact (EI) ionization.

© 2026 BenchChem. All rights reserved.

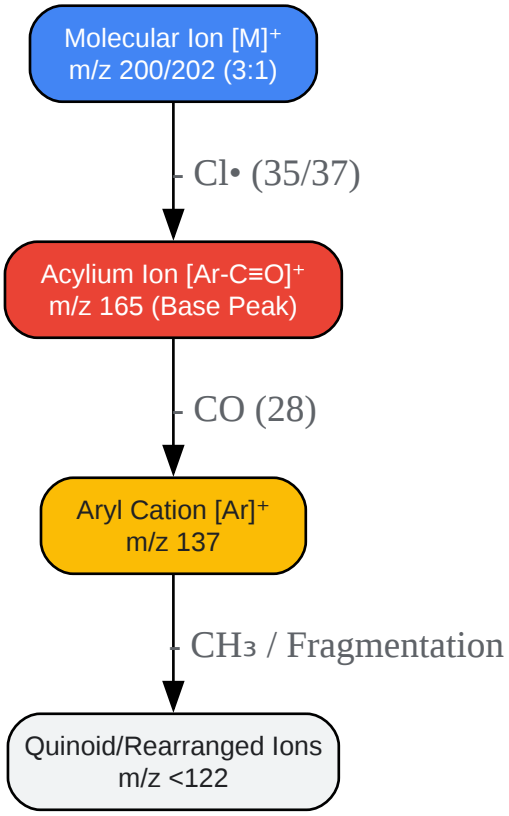

Click to download full resolution via product page

Figure 2: Primary fragmentation pathway.[1] The loss of Chlorine (35/37) to form the base peak at m/z 165 is the diagnostic transition.

References

- Sigma-Aldrich.2,4-Dimethoxybenzoyl chloride Product Specification (Analogous Spectral Class).Link[1]
- National Institute of Standards and Technology (NIST).Benzoyl chloride, 2,3-dimethoxy- Mass Spectrum.[1] NIST Chemistry WebBook, SRD 69.[1] Link
- PubChem.**2,3-Dimethoxybenzoyl chloride** Compound Summary. National Library of Medicine.[1] Link[1][6]
- Silverstein, R. M., et al.Spectrometric Identification of Organic Compounds.[1] (General reference for Acyl Chloride shifts).

© 2026 BenchChem. All rights reserved.

Need Custom Synthesis?

BenchChem offers custom synthesis for rare earth carbides and specific isotopiclabeling.

Email: info@benchchem.com or Request Quote Online.

Sources

- 1. 2,4-Dimethoxybenzoyl chloride | C9H9ClO3 | CID 2734719 - PubChem [pubchem.ncbi.nlm.nih.gov]
- 2. chem.libretexts.org [chem.libretexts.org]
- 3. chem.pg.edu.pl [chem.pg.edu.pl]
- 4. orgchemboulder.com [orgchemboulder.com]
- 5. scholar.ulethbridge.ca [scholar.ulethbridge.ca]
- 6. 2,3-Dimethylbenzoyl chloride | C9H9ClO | CID 2800899 - PubChem [pubchem.ncbi.nlm.nih.gov]
- To cite this document: BenchChem. [Technical Monograph: Spectral Characterization of 2,3-Dimethoxybenzoyl Chloride]. BenchChem, [2026]. [Online PDF]. Available at: [https://www.benchchem.com/product/b1334118#2-3-dimethoxybenzoyl-chloride-spectral-data-nmr-ir-ms]

Disclaimer & Data Validity:

The information provided in this document is for Research Use Only (RUO) and is strictly not intended for diagnostic or therapeutic procedures. While BenchChem strives to provide accurate protocols, we make no warranties, express or implied, regarding the fitness of this product for every specific experimental setup.

Technical Support: The protocols provided are for reference purposes. Unsure if this reagent suits your experiment? [Contact our Ph.D. Support Team for a compatibility check]

Need Industrial/Bulk Grade? Request Custom Synthesis Quote

© 2026 BenchChem. All rights reserved.

BenchChem

Our mission is to be the trusted global source of essential and advanced chemicals, empowering scientists and researchers to drive progress in science and industry.

Contact

Address: 3281 E Guasti Rd

Ontario, CA 91761, United States

Phone: (601) 213-4426

Email: info@benchchem.com

© 2026 BenchChem. All rights reserved.