In-Depth Technical Guide: 2,8-Dioxaspiro[4.5]decan-6-one

Author: BenchChem Technical Support Team. **Date**: April 2026

Compound of Interest

Compound Name:	*2,8-Dioxaspiro[4.5]decan-6-one*
Cat. No.:	*B13325730*

Get Quote

Introduction & Chemical Identity

2,8-Dioxaspiro[4.5]decan-6-one (CAS: 2090308-74-8) represents a distinct subclass of the spiro[4.5]decane family. Unlike the ubiquitous 1,6-dioxaspiro[4.5]decane (a common spiroacetal found in wasp pheromones), the 2,8-dioxa isomer features oxygen atoms positioned distally from the spiro center, classifying it as a spiro-ether rather than a classical spiroacetal.

This structural distinction is critical for drug development:

- Spiroacetals (1,6-dioxa): Thermodynamically stable due to the anomeric effect; prone to acid-catalyzed hydrolysis.
- Spiro-ethers (2,8-dioxa): Lacking the hemiacetal character at the spiro center, these scaffolds offer enhanced metabolic stability, making them valuable bio-isosteres for natural product analogs in pharmaceutical research.

Structural Parameters

© 2026 BenchChem. All rights reserved.

Property	Value
IUPAC Name	2,8-Dioxaspiro[4.5]decan-6-one
Molecular Formula	$C_8H_{12}O_3$
Molecular Weight	156.18 g/mol
Ring System	Spiro[4.5]decane (5-membered + 6-membered rings)
Key Functionality	Ketone (C6), Ether (C2, C8)
Stereochemistry	Chiral at C5 (spiro center); potential for enantiomers

Natural Product Origin & Biological Context

While **2,8-dioxaspiro[4.5]decan-6-one** itself is primarily a synthetic scaffold, its design is biologically inspired by the Spiroacetal class of natural products. The [4.5]-spiro system is a privileged structure in nature, serving as the core for numerous semiochemicals and macrolides.

The Biological Inspiration: 1,6-Dioxaspiro[4.5]decane

The most relevant natural analog is Conophthorin (7-methyl-1,6-dioxaspiro[4.5]decane) and Chalcogran (2-ethyl-1,6-dioxaspiro[4.4]nonane). These compounds are extensively utilized by insects for communication.

- Source Organisms:
  - Paravespula vulgaris (Common Wasp): Pheromone component.
  - Conophthorus spp. (Cone Beetles): Aggregation pheromone.[1]
  - Bactrocera spp. (Fruit Flies): Rectal gland secretion.
- Biosynthetic Logic: Nature assembles these spiro systems from linear polyketide precursors or fatty acid derivatives, which undergo spontaneous cyclization upon deprotection of a ketone.

© 2026 BenchChem. All rights reserved.

Biosynthetic Pathway of Natural Spiroacetals

The formation of the [4.5]-spiro core in nature typically follows a Polyketide Synthase (PKS) pathway. The logic involves the dehydration of a dihydroxy-ketone precursor.

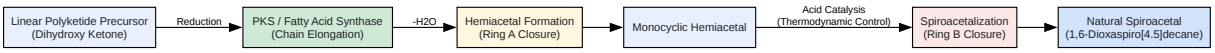

Click to download full resolution via product page

Figure 1: General biosynthetic pathway for natural spiroacetals, the biological precursors to synthetic spiro-ether scaffolds.[2]

Chemical Synthesis & Manufacturing

For research and drug discovery, **2,8-dioxaspiro[4.5]decan-6-one** is synthesized to mimic the spatial arrangement of natural spiroacetals without the hydrolytic instability of the acetal linkage.

Synthetic Strategy: Double Alkylation / Cyclization

A robust synthetic route involves the construction of the spiro quaternary center via double alkylation of a ketone enolate or radical cyclization.

Protocol: Spirocyclization via Radical Translocation

This advanced method ensures the correct formation of the spiro-ether linkage.

- Precursor Preparation:
  - Start with 3-ethoxy-2-cyclohexenone or a similar cyclic enone.
  - Introduce a side chain containing a terminal alkene or alcohol at the alpha-position.
- Radical Cyclization (Key Step):
  - Reagents: Tributyltin hydride (Bu_3SnH), AIBN (Initiator).

© 2026 BenchChem. All rights reserved.

- Mechanism: Generation of an alkyl radical followed by 5-exo-trig cyclization onto the tethered alkene.
- Outcome: Formation of the spiro[4.5] ring system.[2][3][4][5]

- Functionalization:
  - Oxidation of the resulting intermediate to introduce the ketone at C6.

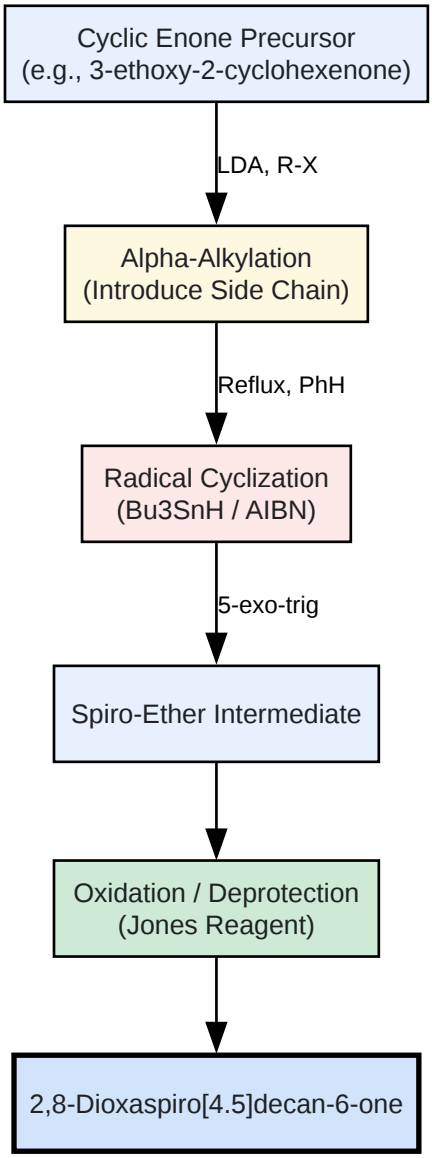

Click to download full resolution via product page

© 2026 BenchChem. All rights reserved.

Figure 2: Synthetic workflow for the construction of the **2,8-dioxaspiro[4.5]decan-6-one** scaffold.

Analytical Characterization

Confirming the structure of the 2,8-dioxa isomer requires differentiating it from the 1,6-dioxa (acetal) isomer.

Technique	Expected Signature for 2,8-Dioxaspiro[4.5]decan-6-one
^{1}H NMR	Distinct signals for protons alpha to oxygen at C2 and C8 (typically 3.5-4.0 ppm). Absence of the characteristic anomeric proton signal found in acetals.
^{13}C NMR	C5 (Spiro): Quaternary carbon signal (approx. 40-50 ppm). C6 (Ketone): Carbonyl signal (approx. 205-210 ppm). C2/C8 (Ether): Signals around 65-70 ppm.
IR Spectroscopy	Strong carbonyl stretch at ~1715 cm^{-1} (ketone). C-O ether stretches at 1050-1150 cm^{-1}.
Mass Spectrometry	Molecular ion [M]+ at m/z 156. Fragmentation typically shows loss of the 5-membered ring or alpha-cleavage at the ketone.

Applications in Drug Discovery

The **2,8-dioxaspiro[4.5]decan-6-one** scaffold is utilized as a pharmacophore in several therapeutic areas:

- Kinase Inhibitors: The rigid spiro core orients substituents in a defined 3D vector, suitable for binding to ATP pockets (e.g., RIPK1 inhibitors).
- Ion Channel Modulators: Analogous to spiro-ether toxins, this scaffold can modulate TRP channels.

© 2026 BenchChem. All rights reserved.

- Metabolic Stability: Replacing a labile spiroacetal (natural) with a spiro-ether (synthetic) often improves the half-life of a drug candidate while maintaining binding affinity.

References

- Francke, W., et al. (1979). "Identification of the Volatile Components of the Wasp Paravespula vulgaris." Journal of Chemical Ecology. (Discovery of the natural 1,6-dioxaspiro[4.5]decane core).[3]
- Mori, K. (2006). "Synthesis of Pheromones: The Spiroacetals." Tetrahedron. (Comprehensive review of spiroacetal synthesis).
- PubChem Compound Summary. (2024). "**2,8-Dioxaspiro[4.5]decan-6-one** (CAS 2090308-74-8)." Link
- Brimble, M. A., et al. (2010). "Spiroacetals in Natural Products: Synthesis and Properties." Natural Product Reports.
- Patent CN113501828B. (2023). "Preparation method of 2,8-dioxaspiro[4.

Need Custom Synthesis?

BenchChem offers custom synthesis for rare earth carbides and specific isotopiclabeling.

Email: info@benchchem.com or Request Quote Online.

Sources

- 1. (PDF) Straightforward Synthesis of 1,6-Dioxaspiro[4.4]nonanes [academia.edu]
- 2. researchgate.net [researchgate.net]
- 3. researchgate.net [researchgate.net]
- 4. researchgate.net [researchgate.net]
- 5. pdf.benchchem.com [pdf.benchchem.com]
- To cite this document: BenchChem. [In-Depth Technical Guide: 2,8-Dioxaspiro[4.5]decan-6-one]. BenchChem, [2026]. [Online PDF]. Available at: [https://www.benchchem.com/product/b13325730/docs#in-depth-technical-guide-2-8-dioxaspiro-4-5-decan-6-one]

© 2026 BenchChem. All rights reserved.

Disclaimer & Data Validity:

The information provided in this document is for Research Use Only (RUO) and is strictly not intended for diagnostic or therapeutic procedures. While BenchChem strives to provide accurate protocols, we make no warranties, express or implied, regarding the fitness of this product for every specific experimental setup.

Technical Support: The protocols provided are for reference purposes. Unsure if this reagent suits your experiment?

Need Industrial/Bulk Grade? Request Custom Synthesis Quote

BenchChem

Our mission is to be the trusted global source of essential and advanced chemicals, empowering scientists and researchers to drive progress in science and industry.

Contact

Address: 3281 E Guasti Rd

Ontario, CA 91761, United States

Phone: (601) 213-4426

Email: info@benchchem.com

Contact our Ph.D. Support Team for a compatibility check

© 2026 BenchChem. All rights reserved.