# Technical Support Center: Conformational Analysis of Azabicyclononanes

**Author**: BenchChem Technical Support Team. **Date**: May 2026

***Compound of Interest***

| | |
|---|---|
| *Compound Name:* | *Methyl 3-azabicyclo[3.3.1]nonane-1-carboxylate* |
| *Cat. No.:* | *B13323271* |

*Get Quote*

Welcome to the technical support center for advanced chemical analysis. This guide is designed for researchers, medicinal chemists, and drug development professionals actively working with substituted azabicyclononane scaffolds. The unique stereochemistry of these bicyclic systems, particularly the equilibrium between chair-chair and boat-chair conformers, presents significant analytical challenges. Misinterpretation of this equilibrium can lead to incorrect structure-activity relationship (SAR) models and stalled development pipelines.

This document provides in-depth, field-tested guidance in a direct question-and-answer format to address the most common issues encountered during the conformational analysis of these critical molecules.

# Frequently Asked Questions (FAQs)

## Section 1: Foundational Concepts

Question: What are the chair-chair and boat-chair conformers of azabicyclononanes, and why is it critical to differentiate them?

© 2026 BenchChem. All rights reserved.

Answer: The 3-azabicyclo[3.3.1]nonane core consists of two fused six-membered rings, a piperidine ring and a cyclohexane ring, sharing a nitrogen and a methine carbon. Like cyclohexane, these rings can adopt different three-dimensional shapes, or conformations, to minimize strain. The two most significant low-energy conformations are:

- Chair-Chair (C-C): Both the piperidine and cyclohexane rings adopt a stable chair conformation. This is generally the most stable form as it minimizes torsional strain and steric interactions.[1][2]
- Boat-Chair (B-C): The piperidine ring remains in a chair form, but the cyclohexane ring flips to a higher-energy boat conformation. This can be stabilized by certain substitution patterns or intramolecular interactions.[3]

Differentiating these conformers is paramount in drug development. The precise 3D arrangement of pharmacophoric groups on the scaffold dictates its binding affinity and selectivity for a biological target. An incorrect conformational assignment can render SAR data meaningless and misdirect synthetic efforts.

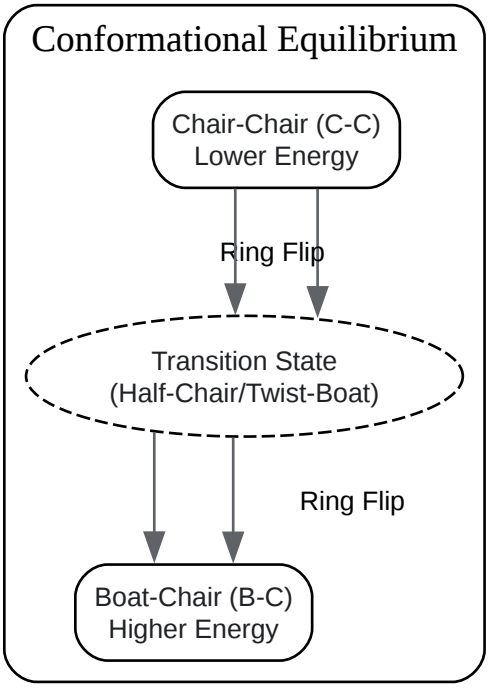


Click to download full resolution via product page

Caption: Conformational equilibrium between chair-chair and boat-chair forms.

© 2026 BenchChem. All rights reserved.

## Section 2: Troubleshooting with NMR Spectroscopy

Nuclear Magnetic Resonance (NMR) spectroscopy is the most powerful tool for elucidating the preferred conformation in solution.[4] However, spectra can often be complex or ambiguous.

Question: How can I use proton ($^1$H) NMR coupling constants to assign conformation?

Answer: The magnitude of the vicinal coupling constant ($^3$J) between two protons is dependent on the dihedral angle between them, as described by the Karplus equation. This is the cornerstone of conformational analysis by NMR.[4]

- In a rigid C-C conformer: You will observe distinct large and small couplings.
  - Large couplings ($^3$J ≈ 10-13 Hz): Typical for axial-axial (ax-ax) interactions, where the dihedral angle is ~180°.
  - Small couplings ($^3$J ≈ 2-5 Hz): Typical for axial-equatorial (ax-eq) and equatorial-equatorial (eq-eq) interactions, with dihedral angles of ~60°.
- In a B-C conformer: The dihedral angles in the "boat" portion of the molecule are altered significantly. Protons that were in a clear ax-ax relationship in the C-C form will now have a much smaller coupling constant. The appearance of multiple medium-sized couplings ($^3$J ≈ 5-8 Hz) where large couplings are expected can be an indicator of a B-C conformer or a dynamic equilibrium.

Question: My $^1$H NMR spectrum shows broad lines or averaged coupling constants. What does this mean?

Answer: This is a classic sign of two or more conformers undergoing rapid exchange on the NMR timescale at the temperature of your experiment.[5] If the rate of interconversion (e.g., C-C ⇌ B-C) is faster than the NMR experiment can distinguish, you will observe a single set of peaks with chemical shifts and coupling constants that are a weighted average of the individual conformers.

Troubleshooting Steps:

© 2026 BenchChem. All rights reserved.

- Variable Temperature (VT) NMR: Lower the temperature of the NMR experiment. If you can slow the interconversion enough, you may be able to "freeze out" the individual conformers, at which point you will see two distinct sets of signals corresponding to each species. This process is known as decoalescence.

- Solvent Change: The conformational equilibrium can be sensitive to the solvent.[3] A non-polar solvent might stabilize a B-C conformer if an intramolecular hydrogen bond is possible, whereas a polar, hydrogen-bonding solvent like methanol or $D_2O$ might disrupt this interaction and favor the C-C conformer. Acquiring spectra in different solvents (e.g., $CDCl_3$ vs. $CD_3OD$) can shift the equilibrium and provide clues.

Question: I am not confident in my assignments. What 2D NMR experiments are essential?

Answer: A full suite of 2D NMR experiments is non-negotiable for unambiguous assignment.

Experimental Protocol: Standard 2D NMR Workflow

- $^{1}H$-$^{1}H$ COSY (Correlation Spectroscopy): Use this to establish all proton-proton spin systems. It helps trace the connectivity within each ring.

- $^{1}H$-$^{13}C$ HSQC (Heteronuclear Single Quantum Coherence): This experiment correlates each proton to its directly attached carbon. It is essential for assigning carbon chemical shifts.

- $^{1}H$-$^{13}C$ HMBC (Heteronuclear Multiple Bond Correlation): This shows correlations between protons and carbons that are 2-3 bonds away. It is invaluable for confirming assignments across the bicyclic system, for example, correlating a proton on C2 to the bridgehead carbon C1.

- $^{1}H$-$^{1}H$ NOESY (Nuclear Overhauser Effect Spectroscopy) or ROESY: This is the definitive experiment for determining through-space proximity, which is the key to differentiating conformers. A NOESY cross-peak indicates that two protons are close in space (< 5 Å), regardless of their bonding connectivity.

Question: How do I interpret NOESY data to distinguish a C-C from a B-C conformer?

Answer: You must look for diagnostic NOE correlations that are only possible in one conformation.

© 2026 BenchChem. All rights reserved.

| Key Diagnostic Feature | Chair-Chair (C-C) Conformer | Boat-Chair (B-C) Conformer | Rationale |
|---|---|---|---|
| Transannular NOEs | Weak or absent NOEs between axial protons across the rings (e.g., H2ax to H8ax). | Strong NOEs between flagpole/bowsprit protons (e.g., H2ax to H4ax or H6ax to H8ax depending on which ring is the boat). | The boat form brings protons on opposite sides of the ring into close proximity (flagpole interaction), a hallmark of this conformation.[6][7] |
| 1,3-Diaxial NOEs | Strong NOEs observed between axial protons on the same ring (e.g., H2ax to H4ax).[8] | These relationships are altered. The absence of expected 1,3-diaxial NOEs can be as informative as their presence. | The rigid chair geometry places 1,3-diaxial protons very close to each other, leading to a strong and reliable NOE. |
| Axial-Equatorial NOEs | Specific NOEs between axial and equatorial protons on adjacent carbons (e.g., H1ax to H2eq). | The pattern of ax-eq and eq-eq proximities changes significantly in the boat ring. | Used to confirm local stereochemistry which builds the larger conformational picture. |

## Section 3: The Role of X-Ray Crystallography and Computational Chemistry

Question: I have a crystal structure. Does that definitively solve the conformation problem?

Answer: Yes and no. Single-crystal X-ray diffraction provides an unambiguous, high-resolution picture of the molecule's conformation in the solid state.[9] It is considered the "gold standard" for structural determination.[4][10]

Crucial Caveat: The conformation observed in the crystal lattice may not be the most stable or biologically relevant conformation in solution. Crystal packing forces can sometimes trap a higher-energy conformer. Therefore, X-ray data must always be correlated with solution-phase data (primarily NMR) and computational modeling.

© 2026 BenchChem. All rights reserved.

Question: How can computational chemistry help when my experimental data is ambiguous?

Answer: Computational chemistry, particularly Density Functional Theory (DFT) calculations, is a powerful predictive tool used to determine the relative thermodynamic stabilities of different conformers.[11][12]

Workflow: Conformer Stability Analysis using DFT

Caption: A typical DFT workflow for conformational analysis.

Troubleshooting Guide for Computational Models:

- My calculation predicts the B-C is more stable, but NMR suggests C-C. Why?
  - Check Your Method: Ensure you have used an appropriate level of theory (functional and basis set). B3LYP/6-31G(d) is a common starting point, but more complex systems may require larger basis sets or different functionals.[13][14]
  - Solvent Effects: Did you perform the calculation in the gas phase? The stability order can invert in solution. Rerun your calculations using a solvent model (e.g., Polarizable Continuum Model - PCM) that matches your experimental conditions.
  - Imaginary Frequencies: A frequency calculation must be performed after every optimization.[15] If you have one or more imaginary frequencies, your structure is not a true energy minimum but a transition state. You must modify the geometry and re-optimize.

By integrating high-quality NMR data, definitive X-ray structures (when available), and predictive computational models, you can build a self-validating system to confidently assign the conformation of your azabicyclononane derivatives.

## References

- Guyot, J., et al. (2006). Identification of isomeric tropane alkaloids from Schizanthus grahamii by HPLC-NMR with loop storage and HPLC-UV-MS/SPE-NMR using a cryogenic flow probe. PubMed. Available at: [Link]

© 2026 BenchChem. All rights reserved.

- Puzanov, Y. V., et al. (1999). Structural and conformational study of azabicyclanones. Sci-Hub. Available at: [Link]
- Jirschitzka, J., et al. (2016). Tropane and Granatane Alkaloid Biosynthesis: A Systematic Analysis. MDPI. Available at: [Link]
- Kim, D., et al. (2020). Conformational preference of bicyclic β-amino acid dipeptides. PubMed. Available at: [Link]
- Taha, A. M., & Rücker, G. (1978). 13C-NMR Spectroscopy of Tropane Alkaloids. Semantic Scholar. Available at: [Link]
- Sathiyamoorthi, P., et al. (2012). Crystal structure of 2-(2,4-diphenyl-3-azabicyclo[3.3.1]nonan-9-ylidene)acetonitrile. PMC. Available at: [Link]
- González-Moro, O., et al. (2000). Structural study of 3-methyl-3-azabicyclo[3.3.1]nonan-9-ols functionalized at the 1-position by molecular mechanics calculations and NMR spectroscopy. ResearchGate. Available at: [Link]
- Taha, A. M., & Rücker, G. (1978). C-NMR spectroscopy of tropane alkaloids. PubMed. Available at: [Link]
- Wang, Z., et al. (2021). The 1H NMR Spectroscopic Effect of Steric Compression Is Found in [3.3.1]Oxa- and Azabicycles and Their. Semantic Scholar. Available at: [Link]
- Pferschy-Wenzig, E.-M., et al. (2016). 1H NMR- based metabolite profiling of tropane alkaloids in Duboisia spec. ResearchGate. Available at: [Link]
- Christodoulou, E., et al. (2022). Synthesis, Conformational Analysis and ctDNA Binding Studies of Flavonoid Analogues Possessing the 3,5-di-tert-butyl-4-hydroxyph. MDPI. Available at: [Link]
- Tormena, C. F., et al. (n.d.). NMR Spectroscopy: a Tool for Conformational Analysis. Auremn. Available at: [Link]
- Gallel, B., et al. (1995). Synthesis and conformational analysis of 2-amino-1,2,3,4-tetrahydro-1-naphthalenols. ResearchGate. Available at: [Link]


© 2026 BenchChem. All rights reserved.

- Thomas, L., et al. (2021). Synthesis and conformational analysis of pyran inter-halide analogues of D-talose. Beilstein Journal of Organic Chemistry. Available at: [Link]
- G. E. Veitch, et al. (2007). Synthesis, Conformational Analysis, and Biological Evaluation of Heteroaromatic Taxanes. Journal of Organic Chemistry. Available at: [Link]
- Katritzky, A. R., et al. (2006). Diazocinones: synthesis and conformational analysis. PubMed. Available at: [Link]
- Suhail, M. (2022). A theoretical density functional theory calculation-based analysis of conformers of p-xylene. European Journal of Chemistry. Available at: [Link]
- Arias-Pérez, M., et al. (1997). Structural study of 3-azabicyclo[3.3.1]nonane derivatives functionalized at 1 and/or 9-positions by molecular mechanics calculations and NMR spectroscopy. Semantic Scholar. Available at: [Link]
- The Pharma Innovation Journal. (2024). A review on x-ray crystallography and it's applications. The Pharma Innovation Journal. Available at: [Link]
- Wibowo, A. H., & Tanjung, M. (2017). Conformational Stability Order of Acyclic Organic Molecules Revisited: A Computer-Based Project in Learning Stereochemistry. ResearchGate. Available at: [Link]
- Puzzarini, C., & Barone, V. (2023). DFT Meets Wave-Function Methods for Accurate Structures and Rotational Constants of Histidine, Tryptophan, and Proline. Scuola Normale Superiore. Available at: [Link]
- Elstner, M., et al. (2000). Energetics and structure of glycine and alanine based model peptides: Approximate SCC-DFTB, AM1 and PM3 methods in comparison with DFT and ab initio calculations. ResearchGate. Available at: [Link]
- Chiacchio, U., & Iannazzo, D. (2024). Density Functional Theory Calculations: A Useful Tool to Investigate Mechanisms of 1,3-Dipolar Cycloaddition Reactions. PMC. Available at: [Link]
- Jyothy, P. J., et al. (2014). An Ab-Initio Study on Conformers of Cyclohexane. International Journal of Engineering Research & Technology. Available at: [Link]


© 2026 BenchChem. All rights reserved.

- Quora. (2020). Is boat or chair conformation more stable?. Quora. Available at: [Link]
- Wikipedia. (n.d.). Cyclohexane conformation. Wikipedia. Available at: [Link]
- Wang, B., et al. (1990). X-ray diffraction studies on the absolute configuration of alpha- and beta-anordrins. PubMed. Available at: [Link]
- College of Saint Benedict & Saint John's University. (n.d.). Solutions to conformation problems. CSB/SJU. Available at: [Link]
- Chemistry LibreTexts. (2021). 4.1: Conformation Analysis of Alkanes. Chemistry LibreTexts. Available at: [Link]
- Sloop, J. C. (2016). Conformational Analysis, Modeling, Stereochemistry and Optical Activity of Cyclohexane Derivatives. Scientific & Academic Publishing. Available at: [Link]
- Fiveable. (2025). Conformational analysis. Fiveable. Available at: [Link]
- DAV University. (n.d.). 6.5 CONFORMATIONS OF CYCLOHEXANE. DAV University. Available at: [Link]
- Hulet, R. (2020). 44: Drawing the most stable conformation of a substituted cyclohexane. YouTube. Available at: [Link]
- BYJU'S. (n.d.). Conformation of cyclohexane. BYJU'S. Available at: [Link]
- International Journal of Engineering Research & Technology. (2014). An Ab-Initio Study on Conformers of Cyclohexane. IJERT. Available at: [Link]
- Chemistry LibreTexts. (2014). 3.10: Conformers of Cyclohexane. Chemistry LibreTexts. Available at: [Link]


***Need Custom Synthesis?***

*BenchChem offers custom synthesis for rare earth carbides and specific isotopiclabeling.*

*Email: info@benchchem.com or Request Quote Online.*

# Sources


- 1. quora.com [quora.com]
- 2. byjus.com [byjus.com]
- 3. researchgate.net [researchgate.net]
- 4. pdf.benchchem.com [pdf.benchchem.com]
- 5. Diazocinones: synthesis and conformational analysis - PubMed [pubmed.ncbi.nlm.nih.gov]
- 6. davuniversity.org [davuniversity.org]
- 7. chem.libretexts.org [chem.libretexts.org]
- 8. pdfs.semanticscholar.org [pdfs.semanticscholar.org]
- 9. resources.rigaku.com [resources.rigaku.com]
- 10. Crystal structure of 2-(2,4-diphenyl-3-azabicyclo[3.3.1]nonan-9-ylidene)acetonitrile - PMC [pmc.ncbi.nlm.nih.gov]
- 11. Conformational preference of bicyclic β-amino acid dipeptides - PubMed [pubmed.ncbi.nlm.nih.gov]
- 12. A theoretical density functional theory calculation-based analysis of conformers of p-xylene | European Journal of Chemistry [eurjchem.com]
- 13. Density Functional Theory Calculations: A Useful Tool to Investigate Mechanisms of 1,3-Dipolar Cycloaddition Reactions - PMC [pmc.ncbi.nlm.nih.gov]
- 14. ijert.org [ijert.org]
- 15. An Ab-Initio Study on Conformers of Cyclohexane – IJERT [ijert.org]


- To cite this document: BenchChem. [Technical Support Center: Conformational Analysis of Azabicyclononanes]. BenchChem, [2026]. [Online PDF]. Available at: [https://www.benchchem.com/product/b13323271/docs#technical-support-center-conformational-analysis-of-azabicyclononanes]

---

**Disclaimer & Data Validity:**

The information provided in this document is for Research Use Only (RUO) and is strictly not intended for diagnostic or therapeutic procedures. While BenchChem strives to provide accurate protocols, we make no warranties, express or implied, regarding the fitness of this product for every specific experimental setup.

**Technical Support:**The protocols provided are for reference purposes. Unsure if this reagent suits your experiment?

**Need Industrial/Bulk Grade?** Request Custom Synthesis Quote

# BenchChem

Our mission is to be the trusted global source of essential and advanced chemicals, empowering scientists and researchers to drive progress in science and industry.

Contact

Address: 3281 E Guasti Rd

Ontario, CA 91761, United States

Phone: (601) 213-4426

Email: info@benchchem.com

Contact our Ph.D. Support Team for a compatibility check

© 2026 BenchChem. All rights reserved.