Application Note: Mass Spectrometric Characterization of 5-Amino-2-methylpyrimidine

Author: BenchChem Technical Support Team. **Date**: May 2026

Compound of Interest

Compound Name:	*5-Amino-2-methylpyrimidine*
CAS No.:	*39889-94-6*
Cat. No.:	*B1331538*

Get Quote

Abstract

This technical guide provides a comprehensive framework for the analysis of **5-Amino-2-methylpyrimidine** using mass spectrometry. As a key structural motif in various biologically active compounds and a vital building block in pharmaceutical development, its unambiguous identification and characterization are paramount. This document details the anticipated fragmentation pathways under electron ionization (EI), provides validated, step-by-step protocols for both Gas Chromatography-Mass Spectrometry (GC-MS) and Liquid Chromatography-Tandem Mass Spectrometry (LC-MS/MS), and offers insights into data interpretation. The methodologies are designed for researchers, analytical chemists, and drug development professionals requiring robust analytical strategies for pyrimidine derivatives.

Introduction: The Analytical Imperative for 5-Amino-2-methylpyrimidine

5-Amino-2-methylpyrimidine ($C_5H_7N_3$, M.W. 109.13 g/mol) is a substituted pyrimidine that serves as a fundamental precursor in the synthesis of numerous pharmaceutical agents, including sulfonamides and other therapeutic compounds. The pyrimidine ring is a core

© 2026 BenchChem. All rights reserved.

component of nucleobases, making its derivatives a focal point of medicinal chemistry research.[1] Accurate analytical characterization is essential for quality control, metabolite identification, and pharmacokinetic studies.

Mass spectrometry (MS) offers unparalleled sensitivity and specificity for the analysis of such small molecules.[2] When coupled with chromatographic separation techniques like Gas Chromatography (GC) or Liquid Chromatography (LC), MS enables the confident identification and quantification of the target analyte, even in complex matrices.[3][4] This guide focuses on elucidating the structural information of **5-Amino-2-methylpyrimidine** through its mass spectrometric fragmentation patterns and provides robust protocols for its analysis.

Ionization & Fragmentation: Unveiling the Molecular Structure

The choice of ionization technique is critical and depends on the analytical objective. For structural elucidation, the high-energy, reproducible nature of Electron Ionization (EI) is often preferred. For sensitive quantification in biological fluids, the softer ionization provided by Electrospray Ionization (ESI) is typically the method of choice.[3]

Proposed Electron Ionization (EI) Fragmentation Pathway

Under standard 70 eV EI conditions, **5-Amino-2-methylpyrimidine** is expected to produce a stable molecular ion ($M^{+\bullet}$) and a series of characteristic fragment ions.[5][6] The fragmentation of pyrimidine derivatives often involves the loss of small, stable neutral molecules like hydrogen cyanide (HCN) and rearrangements of the heterocyclic ring.[7][8]

The proposed fragmentation cascade begins with the molecular ion at m/z 109. The primary fragmentation events are hypothesized to be the loss of a methyl radical or the expulsion of HCN from the pyrimidine ring, leading to the formation of key diagnostic ions.

© 2026 BenchChem. All rights reserved.

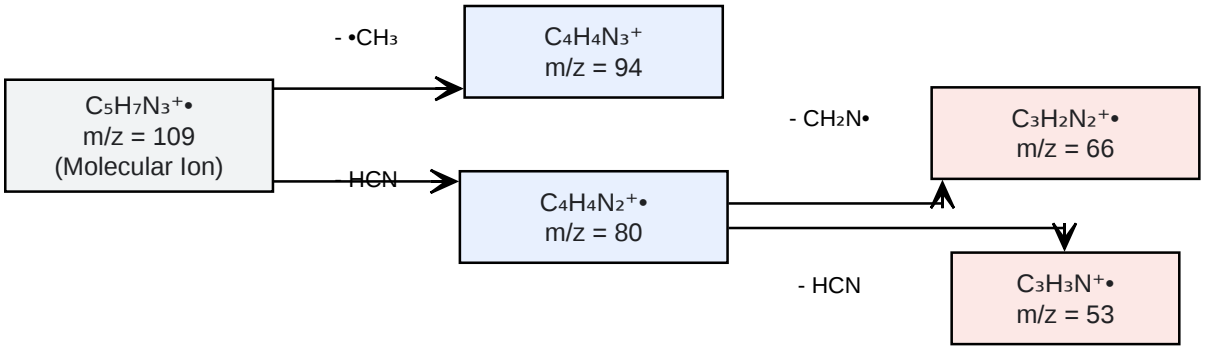

Click to download full resolution via product page

Caption: Proposed EI fragmentation pathway for **5-Amino-2-methylpyrimidine**.

Summary of Key Ions

The anticipated mass-to-charge ratios (m/z) and their corresponding proposed structures provide a fingerprint for the identification of **5-Amino-2-methylpyrimidine**.

m/z	Proposed Fragment Ion	Proposed Neutral Loss	Notes
109	$[C_5H_7N_3]^{+\bullet}$	-	Molecular Ion ($M^{+\bullet}$)
94	$[C_4H_4N_3]^+$	$\bullet CH_3$	Loss of the methyl radical from the pyrimidine ring.
80	$[C_4H_4N_2]^{+\bullet}$	HCN	Loss of hydrogen cyanide, a characteristic fragmentation for N-heterocycles.
66	$[C_3H_2N_2]^{+\bullet}$	$CH_2N\bullet$	Subsequent fragmentation of the m/z 80 ion.
53	$[C_3H_3N]^{+\bullet}$	HCN	Further loss of HCN from the m/z 80 fragment.

© 2026 BenchChem. All rights reserved.

Experimental Protocols

The following protocols are designed as robust starting points and may be optimized based on the specific instrumentation and sample matrix.

Protocol 1: GC-MS for Structural Confirmation

This method is ideal for pure samples or simple mixtures where structural confirmation via fragmentation pattern analysis is the primary goal.

1. Sample Preparation:

- Dissolve 1 mg of **5-Amino-2-methylpyrimidine** standard in 1 mL of methanol or ethyl acetate.
- For unknown samples, perform a suitable extraction (e.g., liquid-liquid extraction with ethyl acetate) and concentrate the organic layer.
- Ensure the final concentration is approximately 10-100 µg/mL.

2. GC-MS Instrumentation & Parameters:

- System: Agilent 8890 GC coupled to a 5977B MSD (or equivalent).
- Column: HP-5ms (30 m x 0.25 mm, 0.25 µm film thickness) or equivalent non-polar capillary column.[9]
- Injector: Split/splitless, operated in split mode (e.g., 20:1) to avoid column overloading.
- Injector Temperature: 250°C.
- Injection Volume: 1 µL.
- Carrier Gas: Helium at a constant flow of 1.2 mL/min.
- Oven Temperature Program:
  - Initial: 100°C, hold for 1 minute.

© 2026 BenchChem. All rights reserved.

  - Ramp: 15°C/min to 280°C.
  - Hold: 5 minutes at 280°C.
- MS Transfer Line Temperature: 280°C.
- Ion Source Temperature: 230°C.
- Ionization Mode: Electron Ionization (EI) at 70 eV.[1]
- Mass Range: m/z 40-300.
- Scan Mode: Full scan.

3. Data Analysis:

- Identify the chromatographic peak corresponding to **5-Amino-2-methylpyrimidine**.
- Extract the mass spectrum from the peak apex.
- Compare the experimental spectrum with the proposed fragmentation data (Section 2.2) and reference libraries such as the NIST Mass Spectral Library.[10]

Protocol 2: LC-MS/MS for Sensitive Quantification

This method is suited for quantifying **5-Amino-2-methylpyrimidine** in complex matrices like plasma, urine, or reaction mixtures, offering high sensitivity and selectivity.[11]

1. Sample Preparation (e.g., for Plasma):

- To 50 µL of plasma, add 150 µL of acetonitrile containing an appropriate internal standard (e.g., a stable isotope-labeled analog or a structurally similar compound).
- Vortex for 1 minute to precipitate proteins.
- Centrifuge at 14,000 rpm for 10 minutes at 4°C.
- Transfer the supernatant to an autosampler vial for analysis.

© 2026 BenchChem. All rights reserved.

2. LC-MS/MS Instrumentation & Parameters:

- System: SCIEX Triple Quad 6500+ with an ExionLC AD system (or equivalent).
- Column: C18 reverse-phase column (e.g., Waters Acquity UPLC BEH C18, 2.1 x 50 mm, 1.7 µm) maintained at 40°C.
- Mobile Phase A: 0.1% formic acid in water.
- Mobile Phase B: 0.1% formic acid in acetonitrile.
- Gradient Elution:
  - 0-0.5 min: 2% B.
  - 0.5-2.5 min: 2% to 95% B.
  - 2.5-3.5 min: 95% B.
  - 3.5-3.6 min: 95% to 2% B.
  - 3.6-5.0 min: 2% B (re-equilibration).
- Flow Rate: 0.5 mL/min.
- Injection Volume: 5 µL.
- Ionization Mode: Electrospray Ionization (ESI), positive mode.
- Ion Source Parameters:
  - IonSpray Voltage: +5500 V.
  - Temperature: 550°C.
  - Curtain Gas (CUR): 35 psi.
  - Ion Source Gas 1 (GS1): 50 psi.

© 2026 BenchChem. All rights reserved.

- Ion Source Gas 2 (GS2): 55 psi.

- Analysis Mode: Multiple Reaction Monitoring (MRM).
  - Q1 (Precursor Ion): 110.1 (for $[M+H]^+$).
  - Q3 (Product Ions): 95.1 (transition for quantification), 81.1 (transition for confirmation). Collision energies should be optimized for the specific instrument.

Integrated Analytical Workflow

A systematic approach ensures reliable and reproducible results, from sample receipt to final data reporting.

© 2026 BenchChem. All rights reserved.

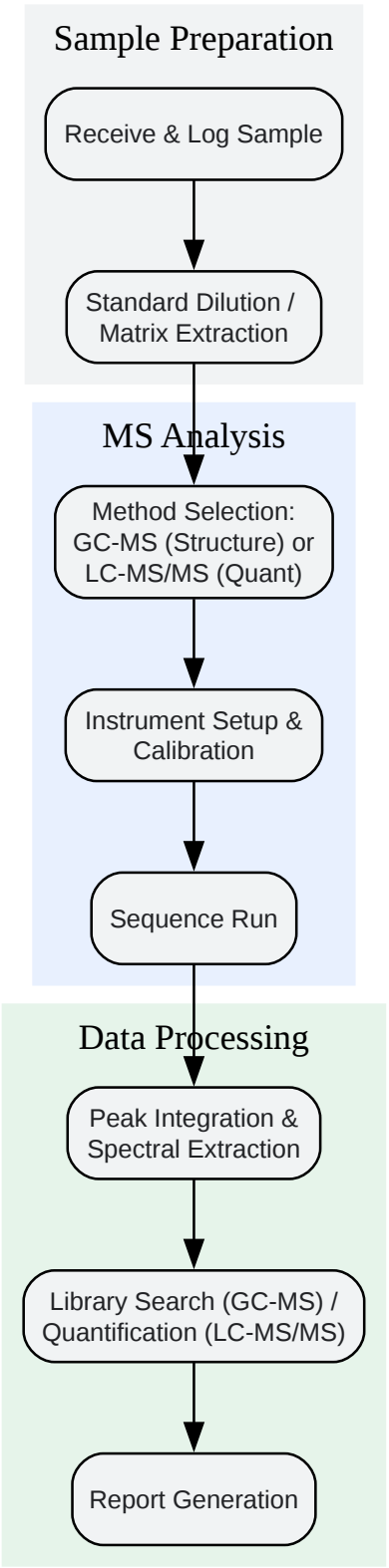

Click to download full resolution via product page

Caption: General workflow for the MS analysis of **5-Amino-2-methylpyrimidine**.

© 2026 BenchChem. All rights reserved.

Conclusion

The methodologies presented in this application note provide a robust foundation for the mass spectrometric analysis of **5-Amino-2-methylpyrimidine**. The proposed EI fragmentation pathway serves as a reliable guide for structural confirmation using GC-MS. For applications requiring high sensitivity and analysis in complex biological matrices, the detailed LC-MS/MS protocol offers excellent performance. By leveraging these optimized protocols, researchers can achieve accurate and reproducible characterization and quantification of this important chemical entity, thereby supporting advancements in pharmaceutical and chemical research.

References

- Evaluating the Accuracy of the QCEIMS Approach for Computational Prediction of Electron Ionization Mass Spectra of Purines and Pyrimidines. MDPI. Available at: [Link]
- Electron ionization mass spectra of some fused pyrimidinone derivatives (MTMT). Semantic Scholar. Available at: [Link]
- Mass Spectral Fragmentation Modes of Some New Pyrimidinethiones, Thiazolo[3,2-a]Pyrimidines and Bis-Pyrimidines. Scientific & Academic Publishing. Available at: [Link]
- Cross-Section Calculations for Electron-Impact Ionization of Pyrimidine Molecule and Its Halogenated Derivatives. National Institutes of Health (NIH). Available at: [Link]
- Mass Spectra of Nucleic Acid Derivatives. Pyrimidines. ACS Publications. Available at: [Link]
- Advanced techniques and applications of LC-MS in small molecule drug discovery. Drug Target Review. Available at: [Link]
- Fast LC/MS in the analysis of small molecules. ResearchGate. Available at: [Link]
- Mass Spectrometry analysis of Small molecules. SlideShare. Available at: [Link]
- Bioanalysis of Small and Large Molecules using LC-MS. Charles River Laboratories. Available at: [Link]
- Fast LC/MS in the analysis of small molecules. Semantic Scholar. Available at: [Link]

© 2026 BenchChem. All rights reserved.

- Mass Spectrometry Data Center. NIST. Available at: [Link]
- Mass Spectrometry - MSU chemistry. Michigan State University. Available at: [Link]
- Pyrimidine, 5-methyl-. NIST WebBook. Available at: [Link]
- Development & validation of LC-MS/MS assay for 5-amino-1-methyl quinolinium in rat plasma: Application to pharmacokinetic and oral bioavailability studies. PubMed. Available at: [Link]
- 2-Amino-4-methylpyrimidine. NIST WebBook. Available at: [Link]
- Mass Spectrometry - Fragmentation Patterns. Chemistry LibreTexts. Available at: [Link]
- mass spectra - fragmentation patterns. Chemguide. Available at: [Link]
- The fragmentation pathway of the nucleosides under the electrospray ionization multi-stage mass spectrometry. Life Science Journal. Available at: [Link]

Need Custom Synthesis?

BenchChem offers custom synthesis for rare earth carbides and specific isotopiclabeling.

Email: info@benchchem.com or Request Quote Online.

Sources

- 1. article.sapub.org [article.sapub.org]
- 2. researchgate.net [researchgate.net]
- 3. drugtargetreview.com [drugtargetreview.com]
- 4. [PDF] Fast LC/MS in the analysis of small molecules | Semantic Scholar [semanticscholar.org]
- 5. Magyar TudomÃ¡nyos MÅ±vek TÃ¡ra [m2.mtmt.hu]
- 6. chemguide.co.uk [chemguide.co.uk]
- 7. mdpi.com [mdpi.com]
- 8. lifesciencesite.com [lifesciencesite.com]

- 9. pdf.benchchem.com [pdf.benchchem.com]
- 10. Mass Spectrometry Data Center, NIST [chemdata.nist.gov]
- 11. Development & validation of LC-MS/MS assay for 5-amino-1-methyl quinolinium in rat plasma: Application to pharmacokinetic and oral bioavailability studies - PubMed [pubmed.ncbi.nlm.nih.gov]
- To cite this document: BenchChem. [Application Note: Mass Spectrometric Characterization of 5-Amino-2-methylpyrimidine]. BenchChem, [2026]. [Online PDF]. Available at: [https://www.benchchem.com/product/b1331538/docs#application-note-mass-spectrometric-characterization-of-5-amino-2-methylpyrimidine]

Disclaimer & Data Validity:

The information provided in this document is for Research Use Only (RUO) and is strictly not intended for diagnostic or therapeutic procedures. While BenchChem strives to provide accurate protocols, we make no warranties, express or implied, regarding the fitness of this product for every specific experimental setup.

Technical Support: The protocols provided are for reference purposes. Unsure if this reagent suits your experiment?

Need Industrial/Bulk Grade? Request Custom Synthesis Quote

BenchChem

Our mission is to be the trusted global source of essential and advanced chemicals, empowering scientists and researchers to drive progress in science and industry.

Contact

Address: 3281 E Guasti Rd

Ontario, CA 91761, United States

Phone: (601) 213-4426

Email: info@benchchem.com

© 2026 BenchChem. All rights reserved.

Contact our Ph.D. Support Team for a compatibility check

© 2026 BenchChem. All rights reserved.