Physicochemical Profiling of Aminoalkoxy Pyridine Derivatives

Author: BenchChem Technical Support Team. **Date**: April 2026

Compound of Interest

Compound Name:	*2-(2-Aminoethoxy)-3,5-dichloropyridine*
Cat. No.:	*B13297130*

Get Quote

A Technical Guide for Drug Design & Optimization

Executive Summary

Aminoalkoxy pyridine derivatives—defined by a pyridine scaffold linked to an aliphatic amine via an ether oxygen—represent a high-value motif in medicinal chemistry.[1] They are frequently employed to resolve the "Solubility-Permeability Paradox" in kinase inhibitors and GPCR ligands.[1] The ether linkage acts as a metabolic "break" and a solubility enhancer, while the terminal amine provides a tunable basic center for salt formation.[2]

This guide provides a deep dive into the specific physical properties that make this class unique: the suppressed basicity of the pyridine ring, the inductive modulation of the terminal amine, and the conformational flexibility of the alkoxy linker.[2]

Molecular Architecture & Electronic Baseline[2]

To understand the physical behavior of these derivatives, one must first analyze the electronic push-pull effects introduced by the aminoalkoxy chain.

© 2026 BenchChem. All rights reserved.

The "Silent" Pyridine Nitrogen

Unlike 2-aminopyridine (where the exocyclic nitrogen donates electrons into the ring, raising the ring nitrogen's pKa to ~6.86), the 2-alkoxypyridine motif behaves differently.

- Resonance Effect: The ether oxygen donates electron density into the ring, theoretically increasing basicity.[2]
- Inductive Effect: The electronegative oxygen exerts a strong

  -withdrawing effect.[1]
- Net Result: The inductive withdrawal dominates.[1] Consequently, the pyridine nitrogen in 2-alkoxy derivatives is significantly less basic (pKa ~3.[1]3) compared to unsubstituted pyridine (pKa ~5.2).[1]

The "Modulated" Aliphatic Amine

The terminal amine (primary, secondary, or tertiary) is separated from the pyridine ring by an ethylene (or longer) linker.[2]

- Baseline: A standard ethylamine has a pKa of ~10.7.[1]
- Effect: The

  -oxygen atom (in the ether linkage) is electron-withdrawing.[1] This lowers the pKa of the terminal amine by approximately 1.5–2.5 log units.
- Result: The terminal amine typically exhibits a pKa in the range of 8.2 – 8.8.[1] This is ideal for drug design, as it ensures the molecule is protonated at physiological pH (improving solubility) but retains a fraction of neutral species for membrane permeation.

Critical Physical Properties[1]

The following data summarizes the property landscape for 2-(2-aminoethoxy)pyridine, a representative core scaffold.

Table 1: Physicochemical Property Profile[2][3][4]

© 2026 BenchChem. All rights reserved.

Property	Value / Range	Mechanistic Driver
MW	138.17 g/mol	Fragment-sized building block.[1]
Ring pKa (Py-N)	~3.3 (Predicted)	Inductive withdrawal by ether oxygen suppresses protonation.[1]
Chain pKa (NH_2)	8.22 ± 0.10	-oxygen effect lowers pKa from typical alkylamine (~10.7).[1]
LogP (Neutral)	0.6 – 0.9	Ether oxygen reduces lipophilicity compared to alkyl analogs.[1]
LogD (pH 7.4)	-1.5 to -0.5	Predominantly ionized (+1 charge) at physiological pH.[1]
Water Solubility	High (>50 mg/mL)	Driven by ionization of the amine and H-bond acceptance of the ether.[1]
H-Bond Donors	2 (Primary amine)	Critical for salt bridge formation in protein pockets.[1]
H-Bond Acceptors	3 (Py-N, Ether-O, Amine-N)	The ether oxygen acts as a weak acceptor; Py-N is a strong acceptor.[1]

Solubility & Lipophilicity (LogD)

The aminoalkoxy motif creates a "solubility anchor." At pH 7.4, the terminal amine is >90% protonated.[2] This charged species prevents crystal lattice energy from dominating, resulting in high aqueous solubility.[2] However, the LogD drops significantly at neutral pH, which can limit passive permeability if the rest of the molecule is not sufficiently lipophilic.[2]

Conformational Flexibility (The Gauche Effect)

© 2026 BenchChem. All rights reserved.

The O-C-C-N torsion angle in the aminoethoxy chain often adopts a gauche conformation (approx. 60°) rather than anti (180°).[1] This is due to the gauche effect, stabilized by hyperconjugation between the

and

orbitals and potential intramolecular H-bonding between the protonated amine and the ether oxygen. This compact shape can influence binding kinetics.[1]

Visualization of Structure-Property Relationships[1][5][6]

The following diagram illustrates how the structural components of the aminoalkoxy pyridine scaffold dictate its physical properties.

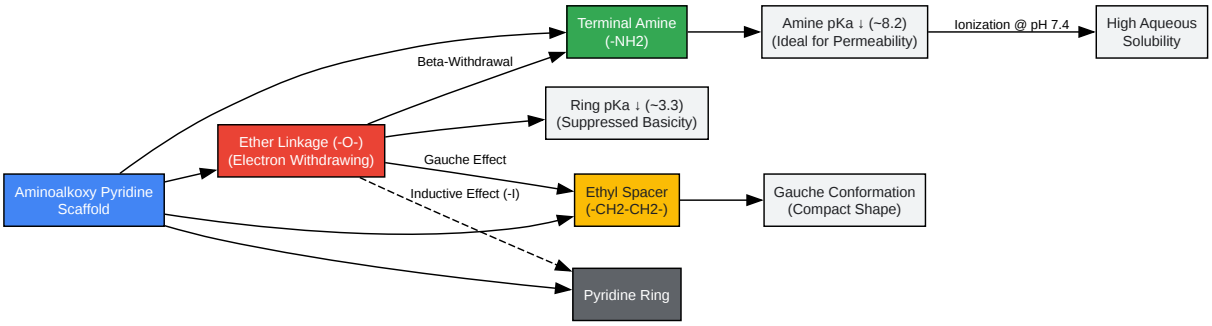

Click to download full resolution via product page

Caption: Causal flow showing how the ether oxygen modulates both the pyridine ring and the terminal amine, resulting in a unique solubility/pKa profile.

Experimental Protocols

Accurate characterization of these derivatives requires specific protocols due to their dual-basic nature and high solubility.[1]

© 2026 BenchChem. All rights reserved.

Protocol 1: Determination of Dual pKa Values (Potentiometric)

Objective: To resolve the widely separated pKa values of the pyridine nitrogen (~3.3) and the aliphatic amine (~8.2).

Methodology:

- Preparation: Dissolve 5 mg of the derivative in 20 mL of 0.15 M KCl (ionic strength adjustor). Ensure the solution is degassed to remove CO_2.
- Acidification: Lower the pH to ~2.0 using 0.1 M HCl. This ensures both the pyridine ring and the amine are fully protonated (dicationic species).
- Titration: Titrate with 0.1 M KOH (standardized) under nitrogen atmosphere at 25°C.
- Data Analysis:
  - Inflection Point 1 (pH ~3-4): Deprotonation of the Pyridine Ring (

).[1]
  - Inflection Point 2 (pH ~8-9): Deprotonation of the Terminal Amine (

).[1]
  - Note: If the compound precipitates between pKa values, add a co-solvent (methanol) and extrapolate to 0% organic solvent using the Yasuda-Shedlovsky equation.

Protocol 2: High-Throughput LogD Profiling (Shake-Flask)

Objective: To determine lipophilicity at physiological pH.[1]

Methodology:

- Phase Preparation: Pre-saturate 1-octanol with phosphate-buffered saline (PBS, pH 7.4) and vice versa for 24 hours.

© 2026 BenchChem. All rights reserved.

- Equilibration: Add 100 µM of compound to the aqueous phase. Add an equal volume of pre-saturated octanol.[1]
- Agitation: Shake at 250 rpm for 4 hours at 25°C. Centrifuge to separate phases.
- Quantification: Analyze both phases using HPLC-UV (254 nm).
- Calculation:

  .

  - Self-Validation: Mass balance should be >95%.[1] If recovery is low, check for adsorption to plasticware (common for cationic amines).[2]

Solid-State Characterization & Stability

Salt Selection

Due to the low pKa of the pyridine ring, monosalts are formed exclusively at the terminal amine with weak acids (e.g., tartaric, citric).[2] Strong acids (HCl, H_2SO_4) can form bis-salts, but the pyridine proton is labile and sensitive to humidity (hygroscopic).[2]

- Recommendation: Target the fumarate or succinate salt.[1] These dicarboxylic acids bridge the two basic centers in the crystal lattice, often stabilizing the gauche conformation and preventing hygroscopicity.[2]

Stability

- Oxidative Stability: The ether linkage is generally stable, but the

  -carbon (next to the ether and amine) is susceptible to metabolic oxidation (N-dealkylation).[1]
- Chemical Stability: The pyridine ring is deactivated towards electrophilic attack, making the scaffold highly stable in formulation.[2]

Diagram: Experimental Decision Tree

© 2026 BenchChem. All rights reserved.

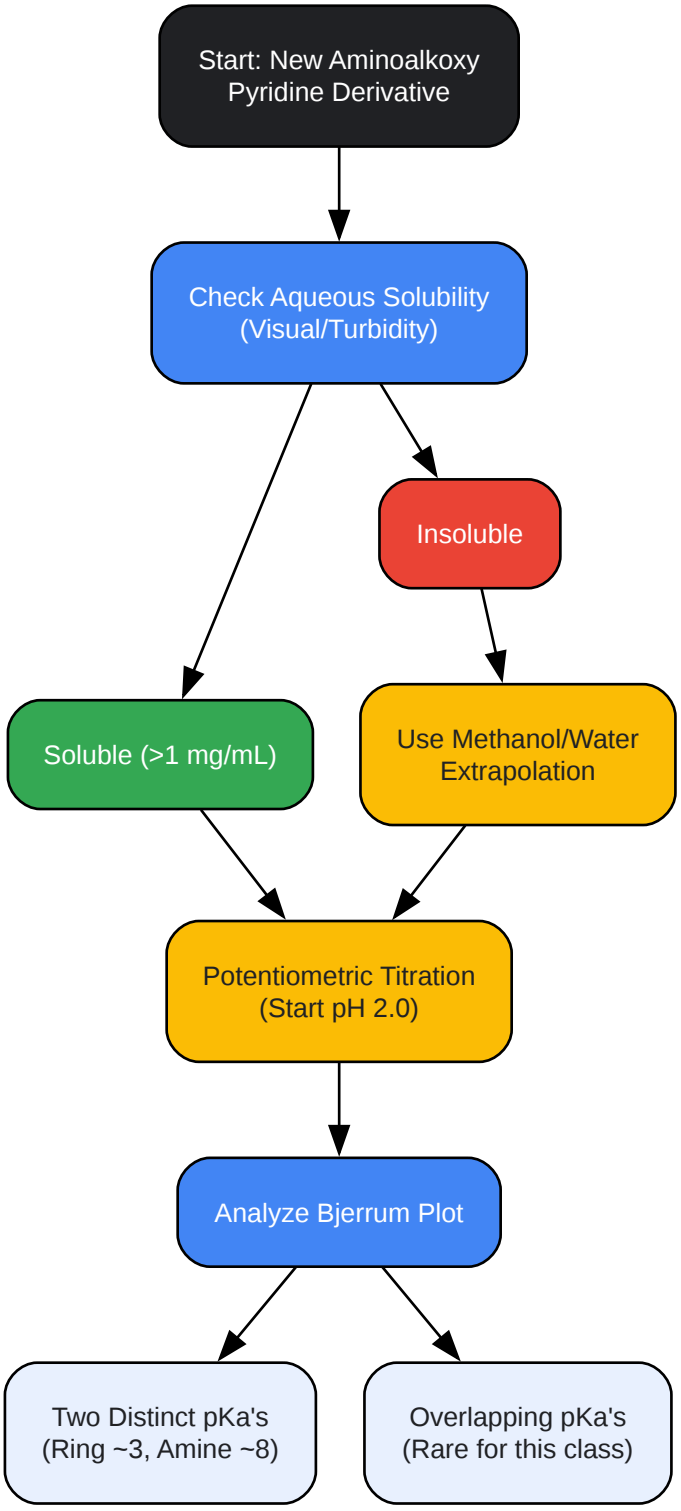

Click to download full resolution via product page

Caption: Workflow for determining ionization constants, accounting for the high solubility of the class.

© 2026 BenchChem. All rights reserved.

References

- ChemicalBook. (2025). 2-(2-aminoethoxy)pyridine Properties and Spectral Data. Retrieved from [1]
- PubChem. (2025).[1][3] 2-(2-Hydroxyethyl)pyridine: Physical Properties and LogP Data. National Library of Medicine. Retrieved from [1]
- Fisher Scientific. (2025).[1] Safety Data Sheet: 2-(2-Aminoethyl)pyridine. Retrieved from [1]
- Alfa Chemistry. (2025).[1][4] pKa Values of Amines, Diamines, and Cyclic Organic Nitrogen Compounds. Retrieved from
- Master Organic Chemistry. (2014). Cleavage of Ethers with Acid and Basicity Trends. Retrieved from

Need Custom Synthesis?

BenchChem offers custom synthesis for rare earth carbides and specific isotopiclabeling.

Email: info@benchchem.com or Request Quote Online.

Sources

- 1. 2-Aminopyridine | NH2C5H4N | CID 10439 - PubChem [pubchem.ncbi.nlm.nih.gov]
- 2. alfa-chemistry.com [alfa-chemistry.com]
- 3. 2-Pyridineethanamine | C7H10N2 | CID 75919 - PubChem [pubchem.ncbi.nlm.nih.gov]
- 4. CompTox Chemicals Dashboard [comptox.epa.gov]
- To cite this document: BenchChem. [Physicochemical Profiling of Aminoalkoxy Pyridine Derivatives]. BenchChem, [2026]. [Online PDF]. Available at: [https://www.benchchem.com/product/b13297130/docs#physicochemical-profiling-of-aminoalkoxy-pyridine-derivatives]

Disclaimer & Data Validity:

The information provided in this document is for Research Use Only (RUO) and is strictly not intended for diagnostic or therapeutic procedures. While BenchChem strives to provide accurate protocols, we make no warranties, express or implied, regarding the fitness of this product for every specific experimental setup.

Technical Support: The protocols provided are for reference purposes. Unsure if this reagent suits your experiment?

Need Industrial/Bulk Grade? Request Custom Synthesis Quote

BenchChem

Our mission is to be the trusted global source of essential and advanced chemicals, empowering scientists and researchers to drive progress in science and industry.

Contact

Address: 3281 E Guasti Rd

Ontario, CA 91761, United States

Phone: (601) 213-4426

Email: info@benchchem.com

Contact our Ph.D. Support Team for a compatibility check

© 2026 BenchChem. All rights reserved.