Neuroprotective Effects of Wasabi-Derived Isothiocyanates: A Technical Guide

Author: BenchChem Technical Support Team. **Date**: April 2026

Compound of Interest

Compound Name:	*Hexyl isothiocyanate*
CAS No.:	*4404-45-9*
Cat. No.:	*B1329761*

Get Quote

Abstract

Neurodegenerative diseases represent a significant and growing global health challenge. Emerging research has identified wasabi-derived isothiocyanates (ITCs), particularly 6-(methylsulfinyl)**hexyl isothiocyanate** (6-MITC or 6-MSITC), as potent neuroprotective agents. These compounds, found in Wasabia japonica, exert their effects primarily through the activation of the Nuclear factor erythroid 2-related factor 2 (Nrf2) signaling pathway, a master regulator of the cellular antioxidant response. This technical guide provides an in-depth overview of the mechanisms of action of wasabi-derived ITCs, detailed experimental protocols for their study, a summary of key quantitative data from preclinical and clinical research, and visualizations of the core signaling pathways.

Introduction

The pungent flavor of wasabi is attributed to a class of organic compounds called isothiocyanates.[1] Beyond their culinary appeal, these compounds have garnered significant scientific interest for their potential therapeutic properties, including anti-inflammatory, antioxidant, and anticancer effects.[1] A key bioactive ITC in wasabi is 6-MITC, which has

© 2026 BenchChem. All rights reserved.

demonstrated promising neuroprotective capabilities in various experimental models.[2][3] This document serves as a comprehensive resource for researchers and drug development professionals interested in the neuroprotective potential of wasabi-derived ITCs.

Core Mechanisms of Neuroprotection

The neuroprotective effects of wasabi-derived ITCs are multifaceted, primarily revolving around their ability to mitigate oxidative stress and neuroinflammation.

Activation of the Nrf2/ARE Signaling Pathway

The Nrf2/Antioxidant Response Element (ARE) pathway is a critical cellular defense mechanism against oxidative stress.[4] Under normal conditions, Nrf2 is sequestered in the cytoplasm by Kelch-like ECH-associated protein 1 (Keap1), which facilitates its degradation.[2][3] Wasabi-derived ITCs, such as 6-MITC, can modify cysteine residues on Keap1, leading to a conformational change that disrupts the Nrf2-Keap1 interaction.[4] This allows Nrf2 to translocate to the nucleus, where it binds to the ARE in the promoter regions of various antioxidant and cytoprotective genes, upregulating their expression.[4] Key downstream targets of Nrf2 include heme oxygenase-1 (HO-1), NAD(P)H quinone dehydrogenase 1 (NQO1), and glutamate-cysteine ligase, which is involved in glutathione (GSH) synthesis.[3][5]

Attenuation of Neuroinflammation via NF-κB and MAPK Signaling

Neuroinflammation, often mediated by activated microglia and astrocytes, is a hallmark of many neurodegenerative diseases. Wasabi-derived ITCs have been shown to suppress the production of pro-inflammatory mediators. Allyl isothiocyanate (AITC), another ITC found in wasabi, inhibits the activation of nuclear factor-kappa B (NF-κB), a key transcription factor that governs the expression of inflammatory cytokines like tumor necrosis factor-alpha (TNF-α) and interleukin-6 (IL-6).[6] This inhibition is mediated, in part, through the modulation of mitogen-activated protein kinase (MAPK) signaling, particularly by downregulating the phosphorylation of c-Jun N-terminal kinase (JNK).[6]

Quantitative Data Summary

The following tables summarize key quantitative data from in vitro and in vivo studies on the neuroprotective effects of wasabi-derived isothiocyanates.

© 2026 BenchChem. All rights reserved.

Table 1: In Vitro Efficacy of Wasabi-Derived Isothiocyanates

Isothiocyanate	Cell Line	Assay	Concentration Range	Key Findings	Reference
6-MITC	IMR-32 (human neuroblastoma)	Gene Expression	10 µM	Upregulation of Nrf2-mediated genes (NQO1, TXNRD1, AKR1C1, AKR1C3)	[3]
6-MITC	K562 (human leukemia)	Cell Viability (MTT Assay)	0-20 µM	IC50 of ~13.0 µM at 24h and ~7.8 µM at 48h	[7]
6-MITC	Jurkat, HL-60 (leukemia)	Cell Viability	2-128 µM	IC50 of 8.65 µM (Jurkat) and 16 µM (HL-60) at 24h	[8]
AITC	BV2 (murine microglia)	Nitric Oxide (NO) Production	1-20 µM	Dose-dependent inhibition of LPS-induced NO production	[6]
AITC	BV2 (murine microglia)	Cytokine Production (ELISA)	1-20 µM	Significant reduction of LPS-induced TNF-α and IL-6	[6]

Table 2: In Vivo Efficacy of Wasabi-Derived Isothiocyanates

© 2026 BenchChem. All rights reserved.

Isothiocyanate	Animal Model	Dosage	Duration	Key Findings	Reference
6-MSITC	Aβ1-42-induced Alzheimer's mouse model	5 mg/kg (i.p.)	10 days	Ameliorated memory impairments in Morris Water Maze test; Reduced oxidative stress and neuroinflammation in the hippocampus.	[2][9]
6-MSITC	Healthy older adults (human clinical trial)	0.8 mg/day	12 weeks	Significant improvement in working and episodic memory performance.	[3]
AITC	Traumatic Brain Injury mouse model	Not specified	Immediate post-injury	Significantly decreased infarct volume and blood-brain barrier permeability.	[8]

Experimental Protocols

This section provides detailed methodologies for key experiments commonly used to investigate the neuroprotective effects of wasabi-derived isothiocyanates.

In Vitro Neuroprotection and Anti-inflammatory Assays

© 2026 BenchChem. All rights reserved.

4.1.1. Cell Culture

- IMR-32 Human Neuroblastoma Cells: Culture in Eagle's Minimum Essential Medium (EMEM) supplemented with 10% fetal bovine serum (FBS) and 1% penicillin-streptomycin. Maintain at 37°C in a humidified atmosphere of 5% CO2.
- BV2 Murine Microglial Cells: Culture in Dulbecco's Modified Eagle's Medium (DMEM) supplemented with 10% FBS and 1% penicillin-streptomycin. Maintain at 37°C in a humidified atmosphere of 5% CO2.

4.1.2. Cell Viability Assay (MTT Assay)

- Seed cells in a 96-well plate at a density of 1 x 10^4 cells/well and allow them to adhere overnight.
- Treat cells with various concentrations of the isothiocyanate for the desired duration (e.g., 24 or 48 hours).
- Add 10 µL of MTT solution (5 mg/mL in PBS) to each well and incubate for 4 hours at 37°C.
- Remove the medium and add 100 µL of DMSO to each well to dissolve the formazan crystals.
- Measure the absorbance at 570 nm using a microplate reader.

4.1.3. Western Blotting for Nrf2 and HO-1

- Treat cells with the isothiocyanate for the specified time.
- Lyse the cells in RIPA buffer containing protease and phosphatase inhibitors.
- Determine protein concentration using a BCA assay.
- Separate equal amounts of protein (20-30 µg) on a 10% SDS-PAGE gel.
- Transfer the proteins to a PVDF membrane.
- Block the membrane with 5% non-fat milk in TBST for 1 hour at room temperature.

© 2026 BenchChem. All rights reserved.

- Incubate the membrane with primary antibodies against Nrf2 (1:1000), HO-1 (1:1000), and a loading control like β-actin (1:5000) overnight at 4°C.
- Wash the membrane with TBST and incubate with HRP-conjugated secondary antibodies for 1 hour at room temperature.
- Visualize the protein bands using an enhanced chemiluminescence (ECL) detection system.

4.1.4. ELISA for TNF-α and IL-6

- Seed BV2 microglia in a 24-well plate and treat with the isothiocyanate followed by stimulation with lipopolysaccharide (LPS; 100 ng/mL) for 24 hours.
- Collect the cell culture supernatant.
- Centrifuge the supernatant to remove any cellular debris.
- Measure the concentrations of TNF-α and IL-6 in the supernatant using commercially available ELISA kits, following the manufacturer's instructions.

In Vivo Alzheimer's Disease Model

4.2.1. Animal Model and Treatment

- Use adult male C57BL/6J mice.
- Induce an Alzheimer's-like pathology via intracerebroventricular (ICV) injection of Aβ1-42 oligomers.
- Administer 6-MSITC (5 mg/kg) or vehicle via intraperitoneal (i.p.) injection daily for 10 days, starting 1 hour after the Aβ1-42 injection.

4.2.2. Morris Water Maze Test

- Use a circular pool (1.5 m in diameter) filled with opaque water.
- Place a hidden platform 1 cm below the water surface in one quadrant.

© 2026 BenchChem. All rights reserved.

- For 5 consecutive days, train the mice in four trials per day to find the hidden platform from different starting positions.
- Record the escape latency (time to find the platform) for each trial.
- On day 6, perform a probe trial where the platform is removed, and allow the mice to swim for 60 seconds.
- Measure the time spent in the target quadrant where the platform was previously located.

Signaling Pathways and Experimental Workflows

The following diagrams, generated using Graphviz (DOT language), illustrate key signaling pathways and experimental workflows.

© 2026 BenchChem. All rights reserved.

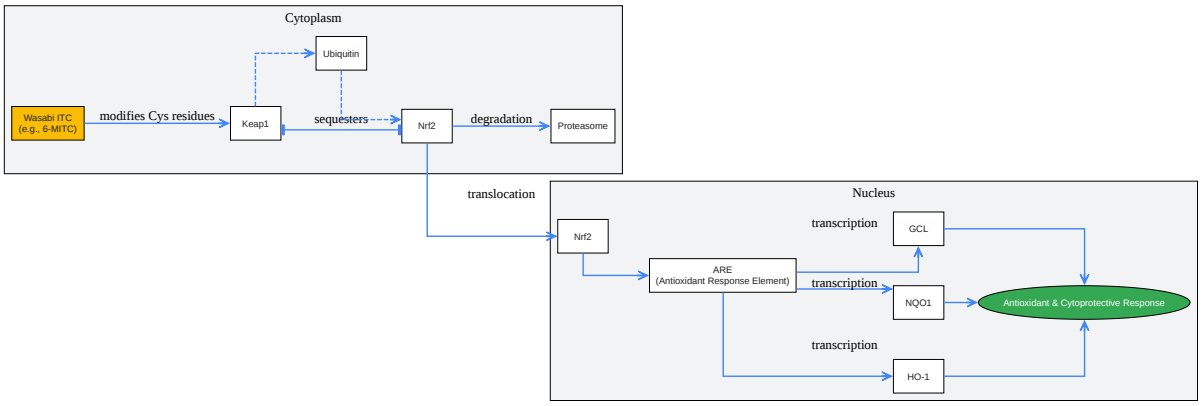

Click to download full resolution via product page

Caption: Nrf2/ARE Signaling Pathway Activation by Wasabi Isothiocyanates.

© 2026 BenchChem. All rights reserved.

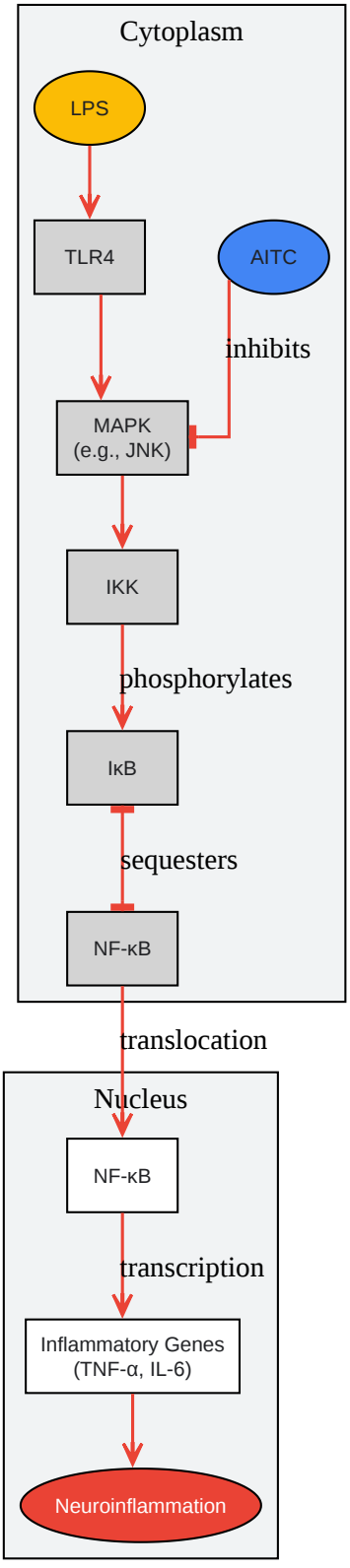

Click to download full resolution via product page

Caption: Inhibition of NF-κB-mediated Neuroinflammation by AITC.

© 2026 BenchChem. All rights reserved.

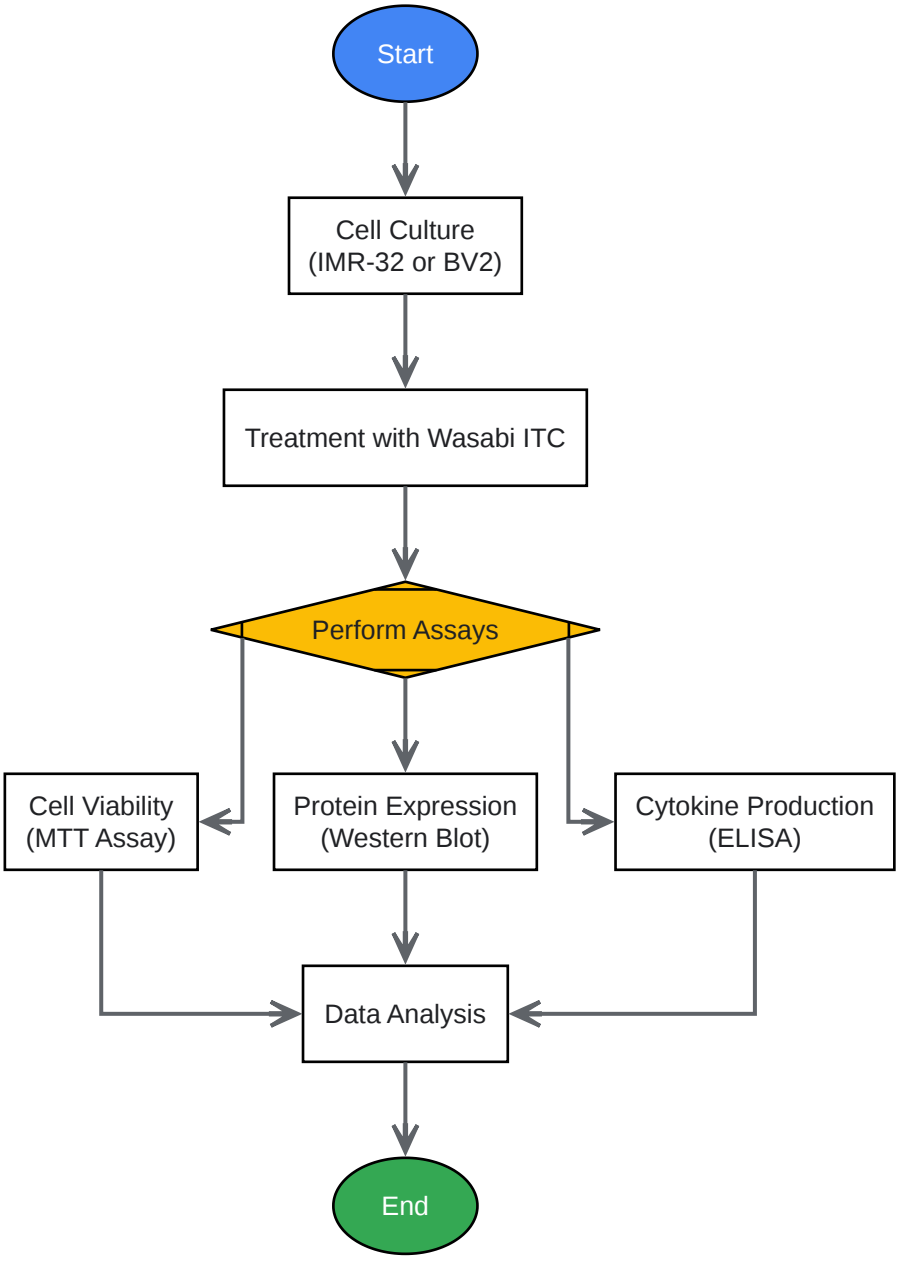

Click to download full resolution via product page

Caption: In Vitro Experimental Workflow.

Conclusion

Wasabi-derived isothiocyanates, particularly 6-MITC, hold significant promise as neuroprotective agents. Their ability to activate the Nrf2 antioxidant pathway and suppress neuroinflammatory signaling cascades provides a strong mechanistic basis for their therapeutic potential in neurodegenerative diseases. This technical guide offers a foundational resource for

© 2026 BenchChem. All rights reserved.

researchers to further explore and harness the neuroprotective properties of these natural compounds. Further preclinical and clinical investigations are warranted to fully elucidate their efficacy and safety profiles for potential translation into novel therapeutic strategies.

Need Custom Synthesis?

BenchChem offers custom synthesis for rare earth carbides and specific isotopiclabeling.

Email: info@benchchem.com or Request Quote Online.

References

- 1. UC Davis - Morris Water Maze [protocols.io]
- 2. Morris water maze: procedures for assessing spatial and related forms of learning and memory - PMC [pmc.ncbi.nlm.nih.gov]
- 3. longdom.org [longdom.org]
- 4. mdpi.com [mdpi.com]
- 5. Cell Viability Assays - Assay Guidance Manual - NCBI Bookshelf [ncbi.nlm.nih.gov]
- 6. NF-kappaB Signaling Pathways in Neurological Inflammation: A Mini Review - PMC [pmc.ncbi.nlm.nih.gov]
- 7. Inflammatory cytokines TNFα, IL-1β, and IL-6 are induced in endotoxin- stimulated microglia through different signaling cascades - PMC [pmc.ncbi.nlm.nih.gov]
- 8. MTT Assay Protocol for Cell Viability and Proliferation [merckmillipore.com]
- 9. researchgate.net [researchgate.net]
- To cite this document: BenchChem. [Neuroprotective Effects of Wasabi-Derived Isothiocyanates: A Technical Guide]. BenchChem, [2026]. [Online PDF]. Available at: [https://www.benchchem.com/product/b1329761/docs#neuroprotective-effects-of-wasabi-derived-isothiocyanates-a-technical-guide]

Disclaimer & Data Validity:

The information provided in this document is for Research Use Only (RUO) and is strictly not intended for diagnostic or therapeutic procedures. While BenchChem strives to provide

accurate protocols, we make no warranties, express or implied, regarding the fitness of this product for every specific experimental setup.

Technical Support: The protocols provided are for reference purposes. Unsure if this reagent suits your experiment?

Need Industrial/Bulk Grade? Request Custom Synthesis Quote

BenchChem

Our mission is to be the trusted global source of essential and advanced chemicals, empowering scientists and researchers to drive progress in science and industry.

Contact

Address: 3281 E Guasti Rd

Ontario, CA 91761, United States

Phone: (601) 213-4426

Email: info@benchchem.com

Contact our Ph.D. Support Team for a compatibility check

© 2026 BenchChem. All rights reserved.