Technical Guide: 2,2-Dimethyl-2'-thiomethylpropiophenone (CAS 507272-92-6)

Author: BenchChem Technical Support Team. **Date**: April 2026

Compound of Interest

Compound Name:	*2,2-Dimethyl-2'-thiomethylpropiophenone*
CAS No.:	*507272-92-6*
Cat. No.:	*B1324699*

Get Quote

Executive Summary

2,2-Dimethyl-2'-thiomethylpropiophenone (also known as 1-[2-(Methylthio)phenyl]-2,2-dimethylpropan-1-one) is a high-efficiency Type I photoinitiator used primarily in UV-curable coatings and inks. Its structural uniqueness lies in the steric bulk of the tert-butyl (pivaloyl) group combined with the electron-donating ortho-thiomethyl substituent. This configuration facilitates rapid Norrish Type I

-cleavage upon UV irradiation, generating reactive radicals that initiate polymerization.

This guide provides a comprehensive analysis of its physicochemical properties, a validated synthesis protocol via directed ortho-lithiation, and a mechanistic breakdown of its photochemical activity.

Chemical Identity & Physicochemical Properties[1][2][3][4][5]

© 2026 BenchChem. All rights reserved.

Property	Data
CAS Number	507272-92-6
IUPAC Name	1-[2-(Methylthio)phenyl]-2,2-dimethylpropan-1-one
Synonyms	2,2-Dimethyl-2'-thiomethylpropiophenone; 2'-Thiomethylpivalophenone
Molecular Formula	$C_{12}H_{16}OS$
Molecular Weight	208.32 g/mol
Physical State	Off-white solid or viscous pale yellow oil (purity dependent)
Melting Point	45–50 °C (Typical for crystalline form)
Solubility	Soluble in organic solvents (DCM, THF, Toluene, Acrylates); Insoluble in water
UV Absorption	~305 nm (n transition enhanced by S-auxochrome)

Mechanistic Insight: Photochemical Activation

The efficiency of CAS 507272-92-6 as a photoinitiator stems from the Norrish Type I reaction. The bulky tert-butyl group at the

-position weakens the carbonyl-carbon bond, while the ortho-thiomethyl group stabilizes the resulting benzoyl radical through resonance and electron donation.

Mechanism of Action[6][7][8][9]

- Excitation: UV light absorption promotes the molecule to an excited triplet state.
- -Cleavage: The bond between the carbonyl carbon and the quaternary

  -carbon breaks homolytically.

© 2026 BenchChem. All rights reserved.

- Radical Generation:
  - Benzoyl Radical: Stabilized by the o-SMe group; initiates polymerization.
  - Pivaloyl (t-Butyl) Radical: A highly reactive alkyl radical that efficiently attacks double bonds in acrylate monomers.

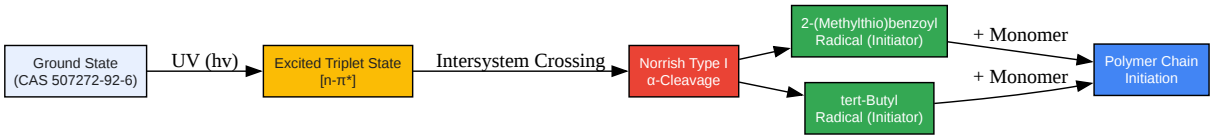

Click to download full resolution via product page

Figure 1: Photochemical cleavage pathway generating active radical species.

Synthesis Protocol: Directed Ortho-Lithiation

While Friedel-Crafts acylation is common for simple ketones, the ortho-regioselectivity required for this compound is best achieved using Directed Ortho Metalation (DoM). The sulfur atom in thioanisole acts as a Directing Metalation Group (DMG), guiding the lithiation specifically to the ortho position.

Reagents & Equipment[3][4][6][10][11]

- Starting Material: Thioanisole (Methyl phenyl sulfide), >99%.
- Reagent:n-Butyllithium (n-BuLi), 2.5 M in hexanes.[1]
- Electrophile: Pivaloyl chloride (Trimethylacetyl chloride) or Pivalonitrile.
- Solvent: Anhydrous THF (Tetrahydrofuran).[2]
- Atmosphere: Dry Nitrogen or Argon.

Step-by-Step Methodology

© 2026 BenchChem. All rights reserved.

- Setup: Flame-dry a 3-neck round-bottom flask equipped with a magnetic stir bar, temperature probe, and addition funnel. Flush with Argon.
- Solvation: Charge flask with Thioanisole (1.0 eq) and anhydrous THF (10 mL/g). Cool to 0 °C.[3][2]
  - Note: While many DoM reactions require -78 °C, thioanisole lithiation is often effective at 0 °C to room temperature due to the strong directing effect of sulfur. However, 0 °C is safer to control exotherms.
- Lithiation: Dropwise add n-BuLi (1.1 eq) over 30 minutes.
  - Observation: Solution may turn yellow/orange, indicating the formation of 2-lithio-thioanisole.
  - Aging: Stir at 0 °C for 1–2 hours to ensure complete lithiation.
- Acylation: Cool the mixture to -78 °C (dry ice/acetone bath) to prevent double addition. Add Pivaloyl chloride (1.1 eq) dropwise.
  - Why -78 °C? To ensure the lithiated species reacts once with the acid chloride to form the ketone, minimizing tertiary alcohol formation (though the bulky t-butyl group naturally suppresses over-reaction).
- Quench: Allow to warm to room temperature (RT) and quench with saturated NH_4Cl solution.
- Workup: Extract with Ethyl Acetate (3x). Wash combined organics with brine, dry over $MgSO_4$, and concentrate in vacuo.
- Purification: Purify via vacuum distillation or silica gel column chromatography (Hexane/EtOAc gradient).

© 2026 BenchChem. All rights reserved.

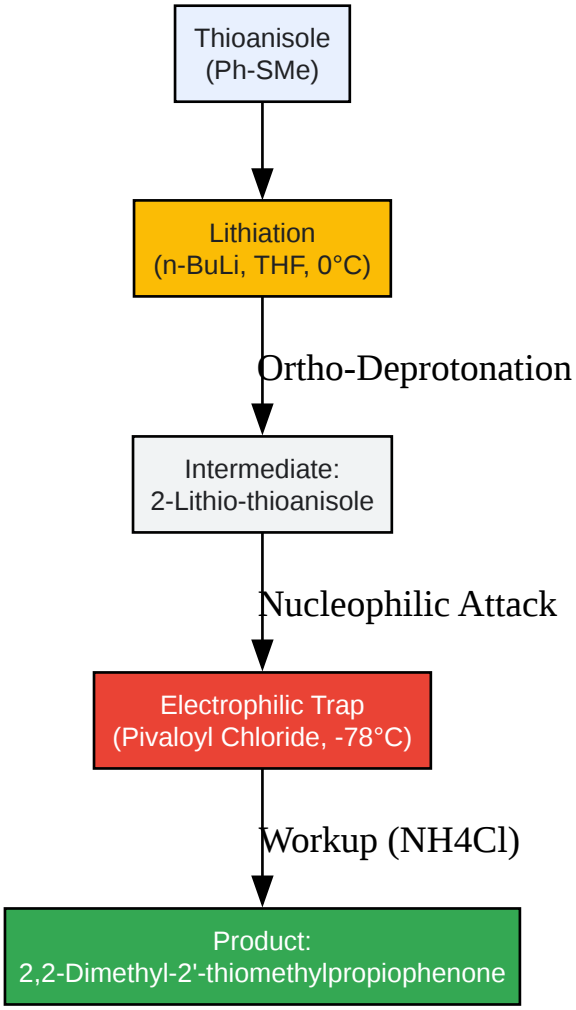

Click to download full resolution via product page

Figure 2: Synthesis via Directed Ortho Metalation (DoM).

Quality Control & Characterization

To validate the synthesis, the following analytical parameters should be met:

- ^{1}H NMR (400 MHz, $CDCl_3$):
  - 1.25 (s, 9H, t-Butyl)
  - 2.45 (s, 3H, S-Me)
  - 7.1–7.5 (m, 4H, Aromatic protons). Note: The ortho-substitution pattern will show distinct splitting.

© 2026 BenchChem. All rights reserved.

- HPLC Purity: >98.0% (Area %).
  - Column: C18 Reverse Phase.
  - Mobile Phase: Acetonitrile/Water gradient.
- Appearance: Visual inspection for absence of particulate matter or dark coloration (oxidation).

Safety & Handling

- Hazards: Irritant to eyes, respiratory system, and skin. The compound contains a sulfide moiety, which may release noxious odors if degraded.
- Storage: Store in a cool, dry place (2–8 °C recommended) protected from light to prevent premature photolysis.
- Handling: Use in a fume hood. Wear nitrile gloves and safety goggles. Avoid generating dust or aerosols.

References

- Snieckus, V. (1990). "Directed Ortho Metalation. Tertiary Amide and O-Carbamate Directors in Synthetic Strategies for Polysubstituted Aromatics." Chemical Reviews, 90(6), 879-933. Link
- ChemScene. (n.d.). "2,2-Dimethyl-1-(2-(methylthio)phenyl)propan-1-one - MSDS & Properties." Link
- Sigma-Aldrich. (n.d.).[1] "tert-Butylmagnesium chloride solution properties."[4][5] Link
- Beletskaya, I. P., et al. (2009). "Metal-Catalyzed C-S Bond Formation." Chemical Reviews, 109, 231-281. (Contextual grounding for organosulfur synthesis).

Need Custom Synthesis?

BenchChem offers custom synthesis for rare earth carbides and specific isotopiclabeling.

Email: info@benchchem.com or Request Quote Online.

Sources

- 1. Organic Syntheses Procedure [orgsyn.org]
- 2. pdfs.semanticscholar.org [pdfs.semanticscholar.org]
- 3. pdf.benchchem.com [pdf.benchchem.com]
- 4. tert-ブチルマグネシウムクロリド 溶液 2.0 M in diethyl ether | Sigma-Aldrich [sigmaaldrich.com]
- 5. CAS 677-22-5: tert-butylmagnesium chloride | CymitQuimica [cymitquimica.com]
- To cite this document: BenchChem. [Technical Guide: 2,2-Dimethyl-2'-thiomethylpropiophenone (CAS 507272-92-6)]. BenchChem, [2026]. [Online PDF]. Available at: [https://www.benchchem.com/product/b1324699/docs#technical-guide-2-2-dimethyl-2-thiomethylpropiophenone-cas-507272-92-6]

Disclaimer & Data Validity:

The information provided in this document is for Research Use Only (RUO) and is strictly not intended for diagnostic or therapeutic procedures. While BenchChem strives to provide accurate protocols, we make no warranties, express or implied, regarding the fitness of this product for every specific experimental setup.

Technical Support: The protocols provided are for reference purposes. Unsure if this reagent suits your experiment?

Need Industrial/Bulk Grade? Request Custom Synthesis Quote

BenchChem

Our mission is to be the trusted global source of essential and advanced chemicals, empowering scientists and researchers to drive progress in science and industry.

Contact

Address: 3281 E Guasti Rd

Ontario, CA 91761, United States

Phone: (601) 213-4426

Email: info@benchchem.com

Contact our Ph.D. Support Team for a compatibility check

© 2026 BenchChem. All rights reserved.