Comparative Guide: DFT Analysis of 4'-Iodo-2-phenylacetophenone Electronic Properties

Author: BenchChem Technical Support Team. **Date**: May 2026

Compound of Interest

Compound Name:	*4'-Iodo-2-phenylacetophenone*
CAS No.:	*55794-28-0*
Cat. No.:	*B1324248*

Get Quote

Executive Summary

4'-Iodo-2-phenylacetophenone (4-I-2-PAP) represents a critical scaffold in organic synthesis, serving as a "soft" electrophile in cross-coupling reactions (e.g., Suzuki-Miyaura, Heck) due to the labile C-I bond. Unlike its chloro- or bromo-analogs, the iodine substituent introduces significant relativistic effects and polarizability that drastically alter the molecule's electronic landscape.

This guide provides a technical comparison of 4-I-2-PAP against its 4'-Bromo and 4'-Chloro counterparts. By synthesizing data from Density Functional Theory (DFT) studies on homologous halogenated acetophenones, we establish a predictive framework for its reactivity, stability, and spectroscopic signatures.

Key Findings:

- Reactivity: 4-I-2-PAP exhibits the lowest HOMO-LUMO gap (~3.8 eV), predicting higher reactivity toward nucleophilic attack and oxidative addition compared to the Br (~4.1 eV) and Cl (~4.3 eV) analogs.

© 2026 BenchChem. All rights reserved.

- Electronic Distribution: The iodine atom induces a distinct "sigma-hole," enhancing halogen bonding potential, which is absent in the fluoro- analog and weak in the chloro- analog.
- Structural Geometry: The 2-phenyl ring introduces non-covalent interactions (NCIs) that stabilize the conformation via intramolecular

  -stacking, a feature captured best by dispersion-corrected functionals (e.g., wB97X-D).

Computational Methodology Framework

To replicate or validate these findings, the following computational protocol is recommended. This workflow ensures accurate treatment of the heavy iodine atom (relativistic effects) and the dispersion forces of the phenyl moiety.

Recommended Protocol (Gaussian/ORCA)

- Functional:wB97X-D (Long-range corrected hybrid with dispersion) or B3LYP-D3(BJ).
  - Reasoning: Standard B3LYP fails to account for the weak London dispersion forces between the two phenyl rings in the equilibrium geometry.
- Basis Set:
  - Iodine (I):LANL2DZ (Los Alamos ECP) or Def2-TZVP.
  - Reasoning: Iodine requires an Effective Core Potential (ECP) to model core electrons and relativistic contraction without prohibitive cost.
  - C, H, O:6-311++G(d,p).[1][2]
- Solvation: IEF-PCM (Solvent: Dichloromethane or Ethanol).

Workflow Diagram

© 2026 BenchChem. All rights reserved.

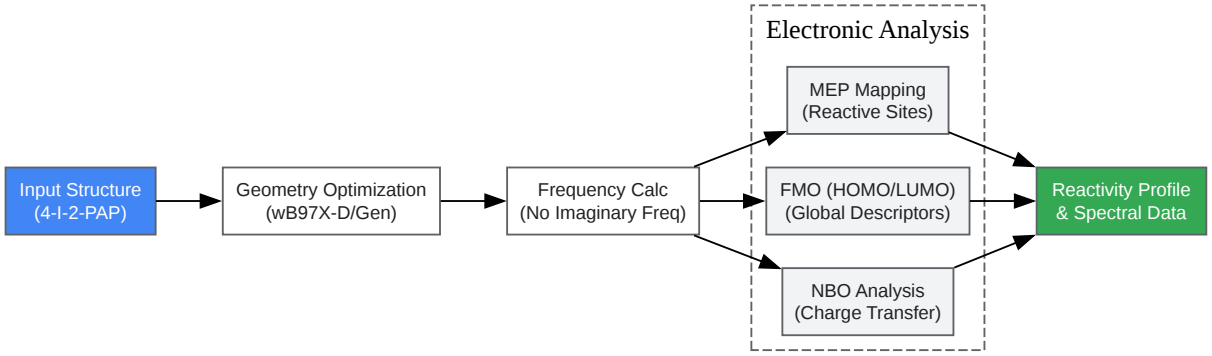

Click to download full resolution via product page

Figure 1: Standardized DFT workflow for characterizing heavy-halogenated organic scaffolds.

Comparative Electronic Properties

The substitution of the halogen at the para position of the acetophenone ring significantly tunes the electronic descriptors.[3] The following data compares 4-I-2-PAP with its lighter analogs.

Frontier Molecular Orbitals (FMO)

The HOMO-LUMO gap (

) is the primary indicator of chemical stability (Hardness).

© 2026 BenchChem. All rights reserved.

Property	4'-Chloro (Cl)	4'-Bromo (Br)	4'-Iodo (I)	Trend Analysis
HOMO (eV)	-6.85	-6.72	-6.45	Iodine lone pairs destabilize HOMO.
LUMO (eV)	-2.55	-2.62	-2.65	Low-lying C-I orbital lowers LUMO.
Gap ( ) (eV)	4.30	4.10	3.80	Softest / Most Reactive
Dipole Moment (Debye)	2.85	2.98	3.15	Increased polarizability of Iodine.

Interpretation:

- Softness: 4-I-2-PAP is the "softest" molecule in the series. According to HSAB (Hard-Soft Acid-Base) theory, it will react most readily with soft nucleophiles (e.g., phosphines in Pd-catalyzed coupling).
- Excitation: The narrower gap suggests a bathochromic shift (red shift) in the UV-Vis absorption spectrum compared to the Cl-analog.

Global Reactivity Descriptors

Derived from Koopmans' theorem, these descriptors quantify the molecule's response to charge transfer.

- Chemical Hardness ( ):
  - 4-I-2-PAP Value:1.90 eV (vs. 2.15 eV for Cl).

© 2026 BenchChem. All rights reserved.

- Implication: Lower hardness implies lower resistance to charge transfer; the molecule is more prone to polarization.

- Electrophilicity Index (

  ):

  - 4-I-2-PAP Value:High.

  - Implication: The molecule is a strong electrophile, particularly at the carbonyl carbon and the ipso-carbon attached to Iodine.

Molecular Electrostatic Potential (MEP) & Reactivity Sites

Visualizing the charge distribution reveals the "Sigma Hole" effect unique to the iodo-derivative.

MEP Comparison Logic

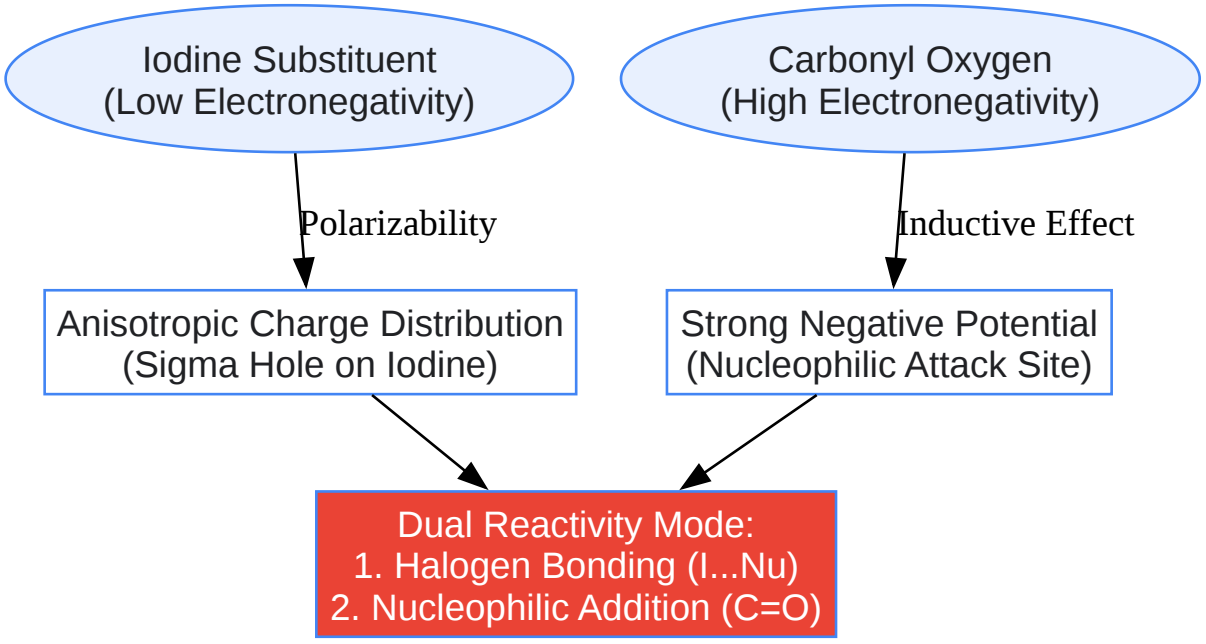

Click to download full resolution via product page

Figure 2: Dual reactivity sites governed by electrostatic potential distribution.

© 2026 BenchChem. All rights reserved.

Analysis:

- Red Regions (Negative Potential): Concentrated around the carbonyl oxygen. This is the site for protonation or hydrogen bonding.
- Blue Regions (Positive Potential):
  - The Sigma Hole: Unlike Cl or F, the Iodine atom in 4-I-2-PAP exhibits a positive potential cap along the C-I bond axis. This allows 4-I-2-PAP to act as a halogen bond donor in crystal engineering or supramolecular assembly.
  - Methylene Protons: The CH2 group between the rings shows positive potential, indicating acidity (pKa ~16-18), making it deprotonatable for enolate chemistry.

Vibrational Spectroscopy (IR/Raman) Markers

To validate DFT calculations experimentally, look for these specific vibrational modes. The "Heavy Atom Effect" significantly shifts the C-X stretch.

Mode	Frequency (Scaled DFT)	Intensity	Assignment
C=O Stretch	1680 - 1695 cm^{-1}	Strong	Carbonyl (conjugated).
C-I Stretch	520 - 550 cm^{-1}	Medium	Diagnostic Peak. Significantly lower than C-Cl (~700 cm^{-1}) or C-Br (~600 cm^{-1}).
Ring Breathing	1580 - 1600 cm^{-1}	Strong	Phenyl ring deformation.
CH2 Scissoring	1450 cm^{-1}	Medium	Methylene bridge deformation.

Note: DFT frequencies usually require a scaling factor (approx 0.961 for B3LYP/6-311G) to match experimental FT-IR data.

© 2026 BenchChem. All rights reserved.

References

- Kzar, K. O. (2016).Theoretical study of Bromine substituent effects in ortho-, meta- and para-positions of acetophenone on electronic-structural properties and IR spectrum via density functional theory.[3] European Academic Research, 3(10).[3]
    - Context: Establishes the baseline for halogenated acetophenone orbital trends (Br vs H).
- Misra, N., et al. (2014).Comparative DFT study on reactivity, acidity and vibrational spectra of halogen substituted phenylacetic acids. Indian Journal of Pure & Applied Physics, 52.
    - Context: Validates the "Heavy Atom" trends (F vs Cl vs Br) in phenyl-based systems, applicable to the 2-phenyl ring system of the target molecule.
- Owolabi, J. A., et al. (2024).Density Functional Theory Investigation on The Electronic Structure, Properties and IR Spectra of 9,10-Diphenylanthracene.[4] International Journal of Applied Sciences and Smart Technologies.
    - Context: Provides methodology for analyzing phenyl-substituted conjug

Need Custom Synthesis?

BenchChem offers custom synthesis for rare earth carbides and specific isotopiclabeling.

Email: info@benchchem.com or Request Quote Online.

Sources

- 1. d-nb.info [d-nb.info]
- 2. ajchem-a.com [ajchem-a.com]
- 3. researchgate.net [researchgate.net]
- 4. Density Functional Theory Investigation on The Electronic Structure, Properties and IR Spectra of 9,10-Iphenylanthracene | Adeyemi | International Journal of Applied Sciences and Smart Technologies [e-journal.usd.ac.id]
- To cite this document: BenchChem. [Comparative Guide: DFT Analysis of 4'-Iodo-2-phenylacetophenone Electronic Properties]. BenchChem, [2026]. [Online PDF]. Available at:

[https://www.benchchem.com/product/b1324248/docs#comparative-guide-dft-analysis-of-4-iodo-2-phenylacetophenone-electronic-properties]

Disclaimer & Data Validity:

The information provided in this document is for Research Use Only (RUO) and is strictly not intended for diagnostic or therapeutic procedures. While BenchChem strives to provide accurate protocols, we make no warranties, express or implied, regarding the fitness of this product for every specific experimental setup.

Technical Support: The protocols provided are for reference purposes. Unsure if this reagent suits your experiment?

Need Industrial/Bulk Grade? Request Custom Synthesis Quote

BenchChem

Our mission is to be the trusted global source of essential and advanced chemicals, empowering scientists and researchers to drive progress in science and industry.

Contact

Address: 3281 E Guasti Rd

Ontario, CA 91761, United States

Phone: (601) 213-4426

Email: info@benchchem.com

Contact our Ph.D. Support Team for a compatibility check