A Comparative Guide to Suzuki Reaction Yields with Isomeric Dibromobenzoates

Author: BenchChem Technical Support Team. **Date**: May 2026

Compound of Interest

Compound Name:	*Ethyl 2,6-dibromobenzoate*
CAS No.:	*1214375-69-5*
Cat. No.:	*B1321914*

Get Quote

For researchers, medicinal chemists, and professionals in drug development, the Suzuki-Miyaura cross-coupling reaction is an indispensable tool for forging carbon-carbon bonds.[1][2] Its reliability and functional group tolerance have cemented its place in the synthesis of complex molecules, from advanced materials to life-saving pharmaceuticals.[3][4] However, the efficiency of this powerful reaction is not uniform across all substrates. The isomeric position of substituents on an aromatic ring can dramatically influence reactivity and, consequently, product yield.

This guide provides an in-depth comparison of the Suzuki reaction performance of ortho-, meta-, and para- substituted dibromobenzoates. Moving beyond a simple procedural outline, we will explore the underlying electronic and steric principles that govern these differences, supported by experimental data and mechanistic insights to empower you to optimize your synthetic strategies.

The Decisive Factors: Unpacking Isomer Reactivity

The observed differences in reaction yields among dibromobenzoate isomers are not arbitrary. They are governed by a predictable interplay of electronic effects and steric hindrance, which

© 2026 BenchChem. All rights reserved.

primarily impact the rate-determining step of the catalytic cycle: oxidative addition.[1]

1. Electronic Effects: The Inductive Pull

The methyl ester (-$COOCH_3$) group on the benzoate ring is moderately electron-withdrawing. This property influences the electron density of the aromatic ring and the attached carbon-bromine (C-Br) bonds. An electron-withdrawing group generally increases the electrophilicity of the carbon atom in the C-Br bond, making it more susceptible to oxidative addition by the electron-rich Palladium(0) catalyst.[1][5]

- Para- and Ortho- Isomers: The electron-withdrawing effect is most pronounced at the para and ortho positions due to resonance and inductive effects.[6] This electronic activation should, in principle, facilitate the oxidative addition step.

- Meta- Isomer: The electronic influence at the meta position is weaker, proceeding primarily through induction.[6]

2. Steric Hindrance: The Overriding Influence

While electronic factors are important, steric hindrance is often the dominant factor, particularly for the ortho-isomer. The Suzuki coupling relies on the palladium catalyst physically approaching the C-Br bond.

- Ortho-Dibromobenzoate: The proximity of the bulky ester group to one of the bromine atoms creates significant steric congestion. This physically impedes the approach of the palladium catalyst's bulky ligand sphere, dramatically slowing the rate of oxidative addition at that site.[5]

- Meta- and Para- Dibromobenzoates: These isomers experience significantly less steric hindrance. The C-Br bonds are more accessible to the catalyst, allowing for a more facile oxidative addition.

Based on these principles, a general reactivity trend can be predicted: Para > Meta >> Ortho. The para-isomer benefits from electronic activation without steric penalty. The meta-isomer is less electronically activated but remains sterically accessible. The ortho-isomer suffers from severe steric hindrance that typically overrides its electronic activation.

© 2026 BenchChem. All rights reserved.

Visualizing the Suzuki Catalytic Cycle

The following diagram illustrates the fundamental steps of the Suzuki-Miyaura reaction, a process central to understanding the reactivity differences between isomers.

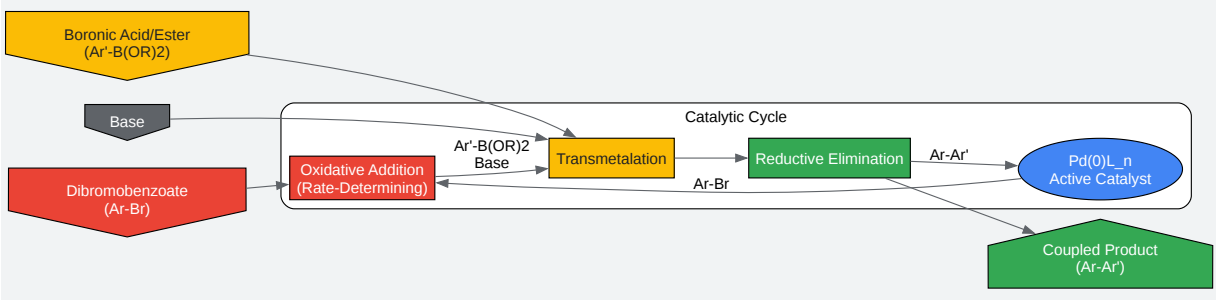

Click to download full resolution via product page

Caption: The catalytic cycle of the Suzuki-Miyaura reaction.

Comparative Experimental Data

While direct, side-by-side comparisons of the three dibromobenzoate isomers under identical conditions are sparse in the literature, data from studies on isomeric dibromobenzenes provide an excellent and relevant proxy. The underlying principles of steric and electronic effects are directly transferable. The following table synthesizes data from a systematic study on the Suzuki-Miyaura reactions of dibromobenzenes with phenylboronic acid.[7]

© 2026 BenchChem. All rights reserved.

Substrate Isomer	Catalyst / Ligand	Base	Solvent	Temp (°C)	Time (h)	Mono-arylated Yield (%)	Di-arylated Yield (%)	Unreacted (%)
p-Dibromobenzene	$Pd(OAc)_2$ / SPhos	K_3PO_4	Toluene	100	24	28	69	3
m-Dibromobenzene	$Pd(OAc)_2$ / SPhos	K_3PO_4	Toluene	100	24	33	52	15
o-Dibromobenzene	$Pd(OAc)_2$ / SPhos	K_3PO_4	Toluene	100	24	42	10	48

Data adapted from a study on dibromobenzenes, which serves as a model for dibromobenzoates.[7]

Analysis of Results:

- Para-Isomer: As predicted, the para-isomer shows the highest conversion and the greatest selectivity for the di-coupled product (69%), demonstrating its high reactivity.[7]
- Meta-Isomer: The meta-isomer also reacts extensively but yields less of the di-arylated product (52%) and leaves more unreacted starting material (15%) compared to the para-isomer.[7]
- Ortho-Isomer: The impact of steric hindrance is starkly evident. The ortho-isomer shows very low conversion, with nearly half (48%) of the starting material remaining unreacted.[7] Furthermore, the reaction strongly favors mono-arylation (42%) over the sterically challenging second coupling (10%).[7]

© 2026 BenchChem. All rights reserved.

Logical Flow: From Isomer Structure to Reaction Yield

This diagram illustrates how the intrinsic properties of each isomer dictate the final reaction outcome.

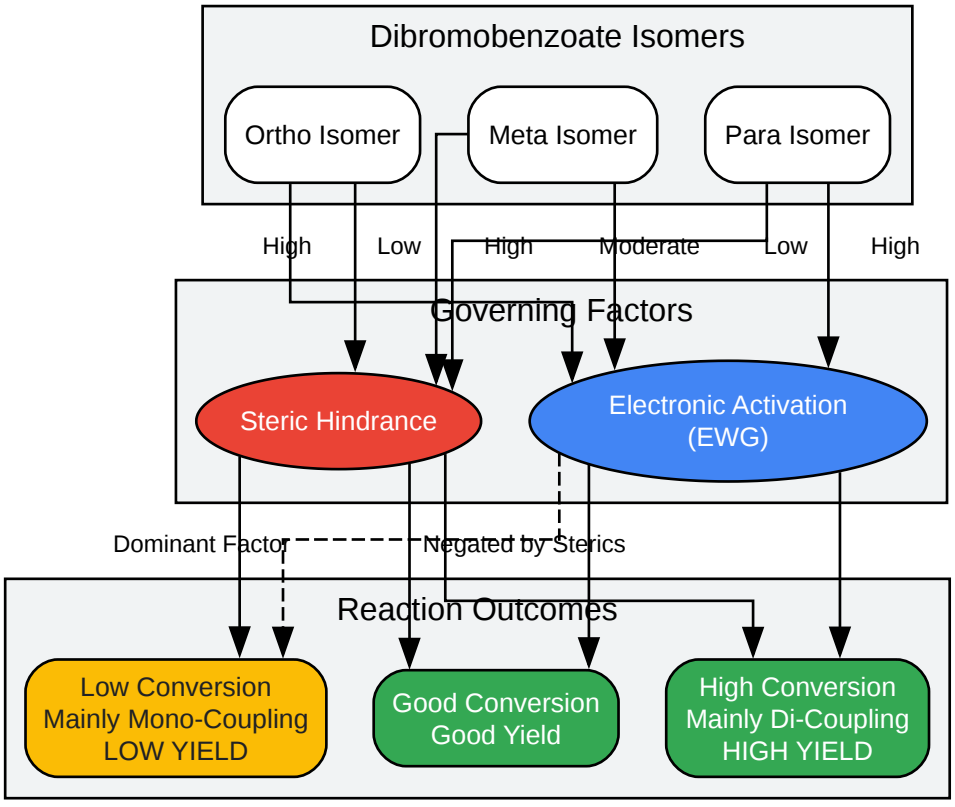

Click to download full resolution via product page

Caption: Relationship between isomer structure, contributing factors, and yield.

Standard Experimental Protocol

This protocol provides a representative, step-by-step methodology for performing a Suzuki-Miyaura coupling with a dibromobenzoate substrate.

Materials:

- Dibromobenzoate isomer (1.0 equiv)

© 2026 BenchChem. All rights reserved.

- Arylboronic acid (2.2 equiv for di-substitution)
- Palladium catalyst (e.g., $Pd(PPh_3)_4$, 1-5 mol%)
- Base (e.g., K_2CO_3, Na_2CO_3, Cs_2CO_3, 3.0 equiv)
- Anhydrous, degassed solvent (e.g., Toluene, Dioxane, THF/Water mixture)
- Schlenk flask or reaction vial with a magnetic stir bar
- Inert atmosphere (Argon or Nitrogen)

Procedure:

- Vessel Preparation: Place a magnetic stir bar into a Schlenk flask. Flame-dry the flask under vacuum and allow it to cool to room temperature under an inert atmosphere.
- Reagent Addition: To the flask, add the dibromobenzoate (1.0 equiv), arylboronic acid (2.2 equiv), and the base (3.0 equiv).
- Atmosphere Cycling: Evacuate the flask and backfill with inert gas. Repeat this cycle 3-5 times to ensure an oxygen-free environment.
- Catalyst and Solvent Addition: Add the palladium catalyst (e.g., $Pd(PPh_3)_4$). Then, add the degassed solvent via syringe. The choice of solvent can significantly affect the reaction, with polar aprotic solvents like dioxane or THF often being effective.[8]
- Reaction: Heat the reaction mixture to the desired temperature (typically 80-110 °C) with vigorous stirring.
- Monitoring: Monitor the reaction progress by thin-layer chromatography (TLC) or gas chromatography-mass spectrometry (GC-MS) until the starting material is consumed.
- Work-up: Once the reaction is complete, cool the mixture to room temperature. Dilute with an organic solvent (e.g., ethyl acetate) and wash with water and brine.
- Purification: Dry the organic layer over anhydrous sodium sulfate (Na_2SO_4), filter, and concentrate under reduced pressure. Purify the crude product by column chromatography on

© 2026 BenchChem. All rights reserved.

silica gel to isolate the desired coupled product.

Conclusion and Field-Proven Recommendations

The experimental evidence strongly supports the predicted reactivity trend for Suzuki couplings with dibromobenzoate isomers: para > meta >> ortho. This hierarchy is a direct consequence of the interplay between the electronic activation from the ester group and the overwhelming steric hindrance at the ortho position.

For the practicing scientist, these findings offer clear strategic guidance:

- For Para and Meta Isomers: Standard Suzuki conditions are often successful, providing good to excellent yields. Optimization may involve screening bases or solvents to maximize efficiency.[8]
- For Ortho Isomers: Overcoming the steric barrier is paramount. Consider employing more reactive, specialized catalytic systems. This includes using bulky, electron-rich phosphine ligands (e.g., SPhos, XPhos) or N-heterocyclic carbene (NHC) ligands, which are known to promote the challenging oxidative addition step.[1][2] Higher reaction temperatures and longer reaction times may also be necessary, though this should be balanced against the risk of side reactions like boronic acid homocoupling.[1]

By understanding the fundamental principles that govern isomer reactivity, researchers can move from trial-and-error to rational design, saving valuable time and resources in the synthesis of novel compounds.

References

- Highlights on the General Preference for Multi-Over Mono-Coupling in the Suzuki–Miyaura Reaction. ResearchGate. [Link]
- Selectivity for Exhaustive Cross-Coupling of Dihaloarenes is Affected by the Interplay Between Halide Byproduct, Solvent, and Ligand. ChemRxiv. [Link]
- Why can't I achieve good yields for this Suzuki reaction?. ResearchGate. [Link]
- Suzuki-Miyaura cross-coupling: Practical Guide. Yoneda Labs. [Link]

© 2026 BenchChem. All rights reserved.

- Pd-Catalyzed, Highly Selective C(sp2)-Br Bond Coupling Reactions of o-(or m-, or p-) Chloromethyl Bromobenzene with Arylboronic Acids. PubMed Central (PMC). [Link]
- Some mechanistic aspects regarding the Suzuki–Miyaura reaction between selected ortho-substituted phenylboronic acids and 3,4,5-tribromo-2,6-dimethylpyridine. Beilstein Journal of Organic Chemistry. [Link]
- Preferential oxidative addition in palladium(0)-catalyzed suzuki cross-coupling reactions of dihaloarenes with arylboronic acids. PubMed. [Link]
- Suzuki reaction. Wikipedia. [Link]
- Ortho, Para, Meta. Chemistry Steps. [Link]
- A Supramolecular Recyclable Catalyst for Aqueous Suzuki-Miyaura Coupling. Royal Society of Chemistry. [Link]
- Ortho-, Para- and Meta- Directors in Electrophilic Aromatic Substitution. Master Organic Chemistry. [Link]
- The Stereochemical Course of Pd-Catalyzed Suzuki Reactions Using Primary Alkyltrifluoroborate Nucleophiles. PubMed Central (PMC). [Link]
- Selective coupling reaction of arylboronic acid with... ResearchGate. [Link]
- A Catalytic Enantiotopic-Group-Selective Suzuki Reaction for the Construction of Chiral Organoboronates. PubMed Central (PMC). [Link]
- Suzuki–Miyaura cross-coupling of unprotected ortho-bromoanilines with benzyl, alkyl, aryl, alkenyl and heteroaromatic boronic esters. National Institutes of Health (NIH). [Link]
- A highly efficient catalyst of nitrogen-based ligand for the Suzuki coupling reaction at room temperature under air in neat water. Royal Society of Chemistry. [Link]
- Results for the Suzuki-Miyaura reactions between a para-dihalobenzene... ResearchGate. [Link]

© 2026 BenchChem. All rights reserved.

- Investigation of the Suzuki–Miyaura cross-coupling reaction on a palladium H-beta zeolite with DFT calculations. PubMed Central (PMC). [Link]

Need Custom Synthesis?

BenchChem offers custom synthesis for rare earth carbides and specific isotopiclabeling.

Email: info@benchchem.com or Request Quote Online.

Sources

- 1. Yoneda Labs [yonedalabs.com]
- 2. Suzuki reaction - Wikipedia [en.wikipedia.org]
- 3. Suzuki–Miyaura cross-coupling of unprotected ortho-bromoanilines with benzyl, alkyl, aryl, alkenyl and heteroaromatic boronic esters - PMC [pmc.ncbi.nlm.nih.gov]
- 4. Investigation of the Suzuki–Miyaura cross-coupling reaction on a palladium H-beta zeolite with DFT calculations - PMC [pmc.ncbi.nlm.nih.gov]
- 5. pdf.benchchem.com [pdf.benchchem.com]
- 6. Ortho, Para, Meta - Chemistry Steps [chemistrysteps.com]
- 7. researchgate.net [researchgate.net]
- 8. researchgate.net [researchgate.net]
- To cite this document: BenchChem. [A Comparative Guide to Suzuki Reaction Yields with Isomeric Dibromobenzoates]. BenchChem, [2026]. [Online PDF]. Available at: [https://www.benchchem.com/product/b1321914/docs#a-comparative-guide-to-suzuki-reaction-yields-with-isomeric-dibromobenzoates]

Disclaimer & Data Validity:

The information provided in this document is for Research Use Only (RUO) and is strictly not intended for diagnostic or therapeutic procedures. While BenchChem strives to provide accurate protocols, we make no warranties, express or implied, regarding the fitness of this product for every specific experimental setup.

© 2026 BenchChem. All rights reserved.

Technical Support: The protocols provided are for reference purposes. Unsure if this reagent suits your experiment?

Need Industrial/Bulk Grade? Request Custom Synthesis Quote

BenchChem

Our mission is to be the trusted global source of essential and advanced chemicals, empowering scientists and researchers to drive progress in science and industry.

Contact

Address: 3281 E Guasti Rd

Ontario, CA 91761, United States

Phone: (601) 213-4426

Email: info@benchchem.com

Contact our Ph.D. Support Team for a compatibility check

© 2026 BenchChem. All rights reserved.