Technical Support Center: Overcoming Resistance to Quinazoline-Based Inhibitors

Author: BenchChem Technical Support Team. **Date**: April 2026

Compound of Interest

Compound Name:	*(E)-4,6-Dichloro-2-styrylquinazoline*
CAS No.:	*36950-52-4*
Cat. No.:	*B1315821*

Get Quote

This technical support center provides troubleshooting guides and frequently asked questions (FAQs) for researchers, scientists, and drug development professionals encountering resistance to quinazoline-based inhibitors in their experiments.

Part 1: Frequently Asked Questions (FAQs)

Q1: What are the primary mechanisms of acquired resistance to quinazoline-based EGFR inhibitors?

Acquired resistance to quinazoline-based EGFR tyrosine kinase inhibitors (TKIs) is a significant challenge in cancer therapy. The mechanisms can be broadly categorized into three main types:

- Target Gene Alterations: The most common mechanism involves secondary mutations in the EGFR gene itself. The T790M mutation in exon 20 is the most frequent cause of resistance to first-generation TKIs like gefitinib and erlotinib, accounting for approximately 50-60% of cases.[1][2][3] This "gatekeeper" mutation increases the affinity of the receptor for ATP,

© 2026 BenchChem. All rights reserved.

reducing the inhibitor's ability to compete for the binding site.[4] More recently, the C797S mutation has emerged as a key resistance mechanism to third-generation inhibitors like osimertinib.[5]

- Bypass Signaling Pathway Activation: Cancer cells can develop resistance by activating alternative signaling pathways to bypass the inhibited EGFR pathway.[1] This can include the amplification or activation of other receptor tyrosine kinases such as MET or HER2, or activation of downstream signaling pathways like the PI3K/AKT/mTOR pathway.[6][7]

- Histological Transformation: In some cases, the tumor may undergo a change in its cell type, a process known as histological transformation. For example, an adenocarcinoma may transform into a small cell lung cancer, which is not dependent on EGFR signaling for its growth.[1]

Q2: How can I experimentally determine the mechanism of resistance in my cell lines?

Identifying the specific mechanism of resistance is crucial for selecting the appropriate strategy to overcome it. Here are some common experimental approaches:

- Genomic Analysis:
  - DNA Sequencing: Perform targeted sequencing of the EGFR kinase domain to identify secondary mutations like T790M or C797S. Whole-exome sequencing (WES) can provide a more comprehensive view of mutations across the genome that may contribute to resistance.[8]
  - Analysis of Circulating Tumor DNA (ctDNA): For in vivo studies, analyzing ctDNA from plasma can be a non-invasive method to detect resistance mutations.[9]
- Analysis of Gene Expression and Protein Levels:
  - Quantitative PCR (qPCR) or Next-Generation Sequencing (NGS): To assess changes in the expression levels of genes involved in bypass pathways (e.g., MET, HER2).[10]
  - Western Blotting or Immunohistochemistry (IHC): To detect the overexpression or activation (phosphorylation) of proteins in bypass signaling pathways (e.g., MET, AKT).

© 2026 BenchChem. All rights reserved.

- Cell-Based Assays:
  - IC50 Determination: Compare the half-maximal inhibitory concentration (IC50) of the quinazoline-based inhibitor in your resistant cell line to the parental, sensitive cell line. A significant increase in the IC50 value confirms resistance.
  - Combination Drug Screening: Test the efficacy of combining the quinazoline-based inhibitor with inhibitors of potential bypass pathways (e.g., a MET inhibitor) to see if sensitivity is restored.

Q3: What are the different generations of quinazoline-based EGFR inhibitors and how do they address resistance?

The development of EGFR inhibitors has progressed through several generations, each designed to address the limitations and resistance mechanisms of the previous one.[2][6]

- First-Generation (e.g., Gefitinib, Erlotinib): These are reversible inhibitors that target the ATP-binding site of EGFR. They are effective against activating EGFR mutations but are susceptible to resistance caused by the T790M mutation.[6]
- Second-Generation (e.g., Afatinib, Dacomitinib): These are irreversible inhibitors that form a covalent bond with the EGFR kinase domain. They have broader activity against the ErbB family of receptors and can overcome T790M-mediated resistance to some extent, but their clinical utility can be limited by toxicity due to their non-selective nature.[2][6]
- Third-Generation (e.g., Osimertinib): These are specifically designed to be mutant-selective, potently inhibiting both activating EGFR mutations and the T790M resistance mutation while sparing wild-type EGFR.[2] However, resistance can still emerge, often through the C797S mutation.
- Fourth-Generation: This newest class of inhibitors is being developed to overcome resistance to third-generation inhibitors, particularly those with the C797S mutation.[5] These include allosteric inhibitors that bind to a different site on the EGFR protein.[4]

Q4: What are the primary strategies to overcome resistance to quinazoline-based inhibitors in a research setting?

© 2026 BenchChem. All rights reserved.

Several strategies can be employed to overcome resistance in your experiments:

- Switch to a Next-Generation Inhibitor: If a specific resistance mutation is identified, switching to an appropriate next-generation inhibitor is a primary strategy. For example, for T790M-mediated resistance, a third-generation inhibitor like osimertinib would be the logical choice.[6]
- Combination Therapy:
  - Targeting Bypass Pathways: Combine the EGFR inhibitor with an inhibitor of the identified bypass pathway (e.g., a MET inhibitor if MET amplification is detected).[11]
  - Combining with Chemotherapy: In some cases, combining EGFR TKIs with traditional chemotherapy agents has shown to improve outcomes in resistant patients.[2]
  - Dual-Target Inhibitors: Utilize novel compounds designed to inhibit both EGFR and a key bypass pathway protein, such as a dual EGFR/c-Met inhibitor.[11]
- Development of Novel Inhibitors: Synthesize or screen for novel quinazoline derivatives with modified structures that can effectively bind to and inhibit the mutated EGFR. Structure-activity relationship (SAR) studies can guide the design of these new compounds.[5]

Part 2: Troubleshooting Guide

Problem: My cells are showing decreased sensitivity to a first-generation quinazoline-based EGFR inhibitor (e.g., gefitinib, erlotinib).

© 2026 BenchChem. All rights reserved.

Possible Cause	Suggested Action
Development of the T790M "gatekeeper" mutation.	1. Sequence the EGFR kinase domain of the resistant cells to confirm the presence of the T790M mutation. 2. If the T790M mutation is present, switch to a third-generation EGFR TKI such as osimertinib.
Activation of a bypass signaling pathway (e.g., MET amplification).	1. Perform a Western blot to check for increased phosphorylation of MET, AKT, or other key nodes in alternative signaling pathways. 2. Test the combination of the first-generation inhibitor with an inhibitor of the activated bypass pathway (e.g., a MET inhibitor).
Histological transformation of the cell line.	1. Analyze the morphology and expression of cell-type specific markers to determine if a change in cell lineage has occurred. 2. If transformation is confirmed, the cell line may no longer be dependent on EGFR signaling, and alternative therapeutic strategies should be explored.

Problem: I have confirmed the presence of the T790M mutation in my resistant cells, but they are not responding to a third-generation inhibitor like osimertinib.

© 2026 BenchChem. All rights reserved.

Possible Cause	Suggested Action
Acquisition of a tertiary EGFR mutation, such as C797S.	1. Sequence the EGFR kinase domain to identify additional mutations. 2. If the C797S mutation is detected, consider testing fourth-generation EGFR inhibitors or allosteric inhibitors that are designed to overcome this resistance mechanism.
Activation of a bypass pathway in addition to the T790M mutation.	1. Analyze the activation status of key bypass signaling pathways (e.g., MET, PI3K/AKT) using Western blotting. 2. Explore combination therapies targeting both the T790M-mutant EGFR and the activated bypass pathway.

Part 3: Data Presentation

Table 1: Inhibitory Activity (IC50) of Novel Quinazoline Derivatives Against Resistant EGFR Mutants

Compound	**Target EGFR Mutant**	**IC50 (μM)**	**Reference Cell Line(s)**	**Reference**
8d	L858R/T790M/C797S	0.068	-	[5]
H-22	L858R/T790M	0.3054	-	[11]
Compound 79	T790M/L858R	0.031	-	[12]
Compound 23	-	0.005	EGFR mutant cell lines	[13]
Compound 6	L858R/T790M	0.3054	-	[14]
Compound 23 (quinazolinone)	L858R/T790M	0.0002	Ba/F3 cells	[4]

© 2026 BenchChem. All rights reserved.

Note: The specific cell lines used for IC50 determination can vary between studies. Please refer to the original publications for detailed experimental conditions.

Part 4: Experimental Protocols

Protocol 1: Determination of IC50 using a Cell Viability Assay

This protocol outlines a general procedure for determining the half-maximal inhibitory concentration (IC50) of a quinazoline-based inhibitor.

- Cell Seeding: Seed the sensitive and resistant cancer cells in 96-well plates at a predetermined optimal density and allow them to adhere overnight.
- Drug Treatment: Prepare serial dilutions of the quinazoline-based inhibitor in culture medium. Remove the old medium from the cells and add the medium containing the different concentrations of the inhibitor. Include a vehicle-only control.
- Incubation: Incubate the plates for a period that allows for the assessment of cell proliferation (typically 48-72 hours).
- Viability Assessment: Add a viability reagent (e.g., MTT, PrestoBlue, or CellTiter-Glo) to each well according to the manufacturer's instructions.
- Data Acquisition: Measure the absorbance or luminescence using a plate reader.
- Data Analysis: Normalize the data to the vehicle-only control and plot the percentage of viable cells against the logarithm of the inhibitor concentration. Use a non-linear regression model (e.g., log(inhibitor) vs. response -- Variable slope (four parameters)) to calculate the IC50 value.

Protocol 2: Western Blot Analysis of Signaling Pathway Activation

This protocol provides a general workflow for assessing the phosphorylation status of key proteins in the EGFR and bypass signaling pathways.

- Cell Lysis: Treat cells with the quinazoline-based inhibitor for the desired time points. Wash the cells with ice-cold PBS and lyse them in RIPA buffer supplemented with protease and phosphatase inhibitors.

© 2026 BenchChem. All rights reserved.

- Protein Quantification: Determine the protein concentration of the lysates using a protein assay (e.g., BCA assay).
- SDS-PAGE: Denature the protein samples and separate them by size using sodium dodecyl sulfate-polyacrylamide gel electrophoresis (SDS-PAGE).
- Protein Transfer: Transfer the separated proteins from the gel to a nitrocellulose or PVDF membrane.
- Blocking: Block the membrane with a suitable blocking buffer (e.g., 5% non-fat milk or bovine serum albumin in TBST) to prevent non-specific antibody binding.
- Primary Antibody Incubation: Incubate the membrane with primary antibodies specific for the phosphorylated and total forms of the proteins of interest (e.g., p-EGFR, EGFR, p-AKT, AKT, p-MET, MET).
- Secondary Antibody Incubation: Wash the membrane and incubate it with a horseradish peroxidase (HRP)-conjugated secondary antibody that recognizes the primary antibody.
- Detection: Add an enhanced chemiluminescence (ECL) substrate and visualize the protein bands using a chemiluminescence imaging system.
- Analysis: Quantify the band intensities and normalize the levels of phosphorylated proteins to the total protein levels.

Part 5: Visualizations

© 2026 BenchChem. All rights reserved.

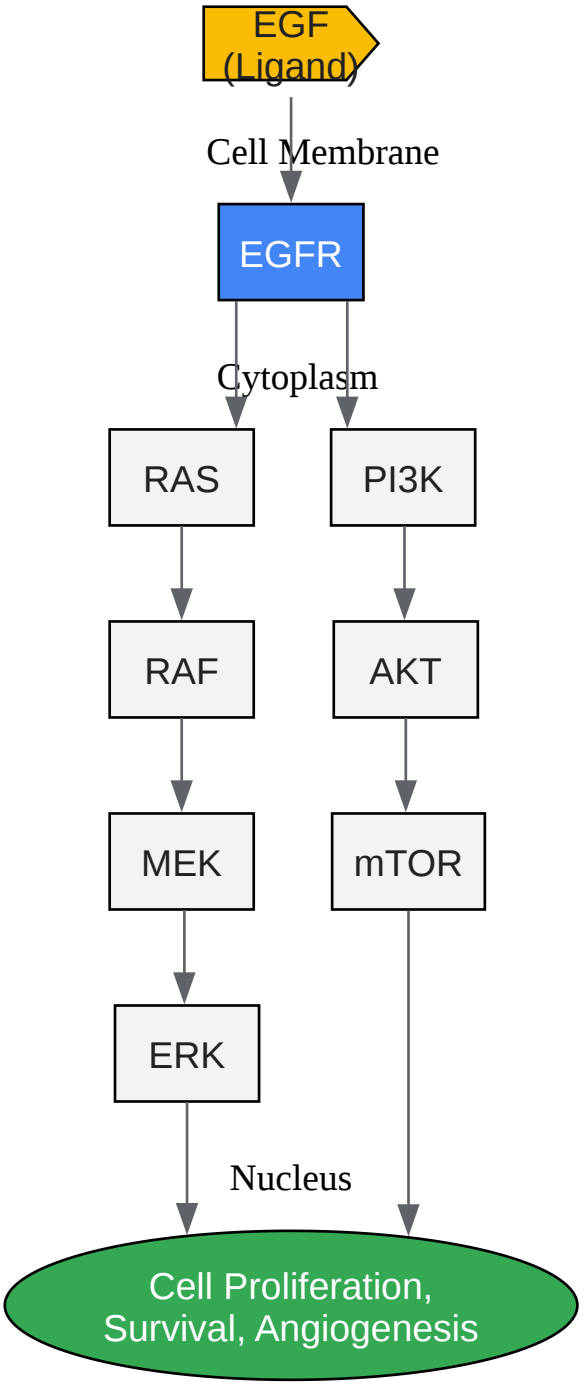

Click to download full resolution via product page

Diagram 1: Simplified EGFR Signaling Pathway.

© 2026 BenchChem. All rights reserved.

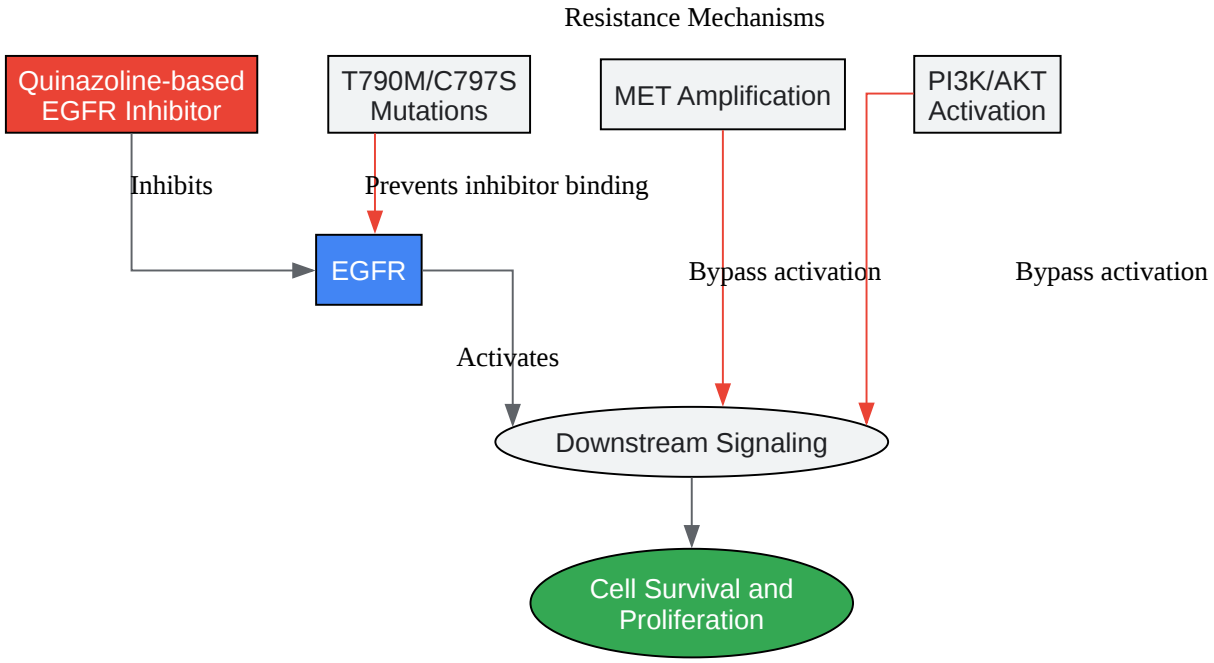

Click to download full resolution via product page

Diagram 2: Overview of Resistance Mechanisms.

© 2026 BenchChem. All rights reserved.

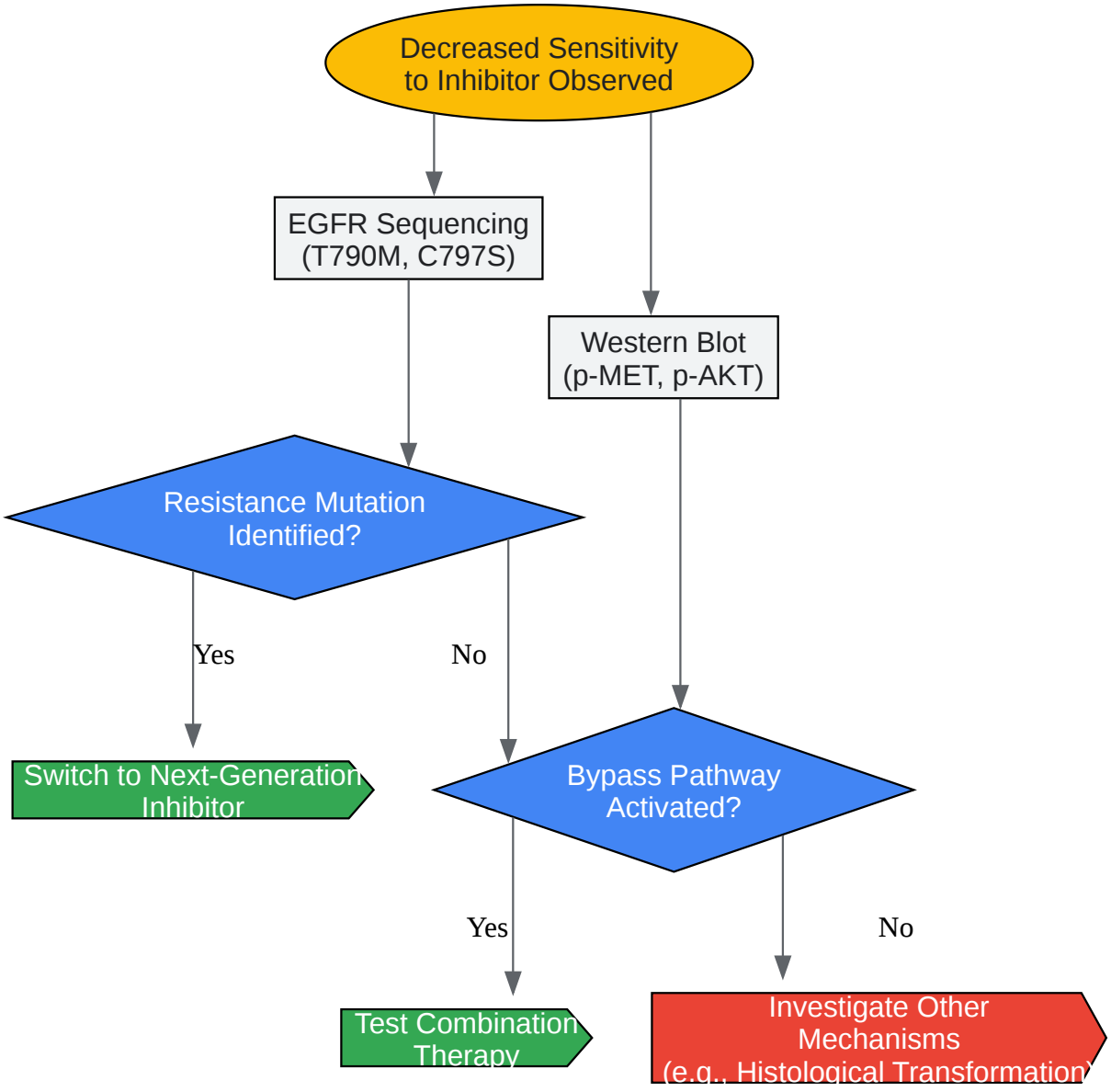

Click to download full resolution via product page

Diagram 3: Troubleshooting Workflow for Resistance.

Need Custom Synthesis?

BenchChem offers custom synthesis for rare earth carbides and specific isotopiclabeling.

Email: info@benchchem.com or Request Quote Online.

© 2026 BenchChem. All rights reserved.

References

- 1. Strategies to overcome acquired resistance to EGFR TKI in the treatment of non-small cell lung cancer - PubMed [pubmed.ncbi.nlm.nih.gov]
- 2. oncotarget.com [oncotarget.com]
- 3. Mechanisms of Resistance to EGFR TKIs and Development of a New Generation of Drugs in Non-Small-Cell Lung Cancer - PMC [pmc.ncbi.nlm.nih.gov]
- 4. Quinazolinones as allosteric fourth-generation EGFR inhibitors for the treatment of NSCLC - PMC [pmc.ncbi.nlm.nih.gov]
- 5. Quinazoline-based fourth-generation EGFR tyrosine kinase inhibitors to overcome C797S-mediated resistance in non-small cell lung Cancer (NSCLC) - PubMed [pubmed.ncbi.nlm.nih.gov]
- 6. ascopubs.org [ascopubs.org]
- 7. aacrjournals.org [aacrjournals.org]
- 8. Frontiers | Identification of potential inhibitors for drug-resistant EGFR mutations in non-small cell lung cancer using whole exome sequencing data [frontiersin.org]
- 9. Guide to detecting epidermal growth factor receptor (EGFR) mutations in ctDNA of patients with advanced non-small-cell lung cancer - PMC [pmc.ncbi.nlm.nih.gov]
- 10. youtube.com [youtube.com]
- 11. Novel quinazoline-based dual EGFR/c-Met inhibitors overcoming drug resistance for the treatment of NSCLC: Design, synthesis and anti-tumor activity - PubMed [pubmed.ncbi.nlm.nih.gov]
- 12. Design and synthesis of quinazolinones as EGFR inhibitors to overcome EGFR resistance obstacle - PubMed [pubmed.ncbi.nlm.nih.gov]
- 13. mdpi.com [mdpi.com]
- 14. Recent Advances in Structural Optimization of Quinazoline-Based Protein Kinase Inhibitors for Cancer Therapy (2021–Present) [mdpi.com]

- To cite this document: BenchChem. [Technical Support Center: Overcoming Resistance to Quinazoline-Based Inhibitors]. BenchChem, [2026]. [Online PDF]. Available at: [https://www.benchchem.com/product/b1315821/docs#technical-support-center-overcoming-resistance-to-quinazoline-based-inhibitors]

Disclaimer & Data Validity:

© 2026 BenchChem. All rights reserved.

The information provided in this document is for Research Use Only (RUO) and is strictly not intended for diagnostic or therapeutic procedures. While BenchChem strives to provide accurate protocols, we make no warranties, express or implied, regarding the fitness of this product for every specific experimental setup.

Technical Support: The protocols provided are for reference purposes. Unsure if this reagent suits your experiment?

Need Industrial/Bulk Grade? Request Custom Synthesis Quote

BenchChem

Our mission is to be the trusted global source of essential and advanced chemicals, empowering scientists and researchers to drive progress in science and industry.

Contact

Address: 3281 E Guasti Rd

Ontario, CA 91761, United States

Phone: (601) 213-4426

Email: info@benchchem.com

Contact our Ph.D. Support Team for a compatibility check

© 2026 BenchChem. All rights reserved.