Optimal concentration of DDAIP in topical formulations

Author: BenchChem Technical Support Team. **Date**: May 2026

Compound of Interest

Compound Name:	*Dodecyl 2-(dimethylamino)propanoate hydrochloride*
CAS No.:	*259685-49-9*
Cat. No.:	*B1313087*

Get Quote

An Application Note on the Optimal Concentration of DDAIP in Topical Formulations

Introduction

N,N-didecyl-N-isopropoxyethyl-N-methylammonium iodide (DDAIP), and more commonly its hydrochloride salt, dodecyl-2-N,N-dimethylaminopropionate hydrochloride (DDAIP.HCl), is a potent skin permeation enhancer used in topical and transdermal drug formulations.[1][2] It is classified as a functional, non-active excipient designed to increase the flux of active pharmaceutical ingredients (APIs) across the formidable barrier of the stratum corneum.[2] DDAIP is a key component in approved drug products, such as Vitaros™, a topical cream for erectile dysfunction containing alprostadil.[3][4] The primary mechanism of action involves temporarily and reversibly altering the dynamics of the lipid bilayer and loosening the tight junctions between corneocytes, which facilitates the passage of drug molecules into the systemic circulation.[1][2][5]

© 2026 BenchChem. All rights reserved.

Determining the optimal concentration of DDAIP is a critical step in formulation development. The goal is to maximize the permeation-enhancing effect for the desired API while minimizing the potential for local skin irritation or damage. This document provides essential data, protocols, and workflows for researchers and formulation scientists to establish the optimal DDAIP concentration for their specific applications.

Mechanism of Action

DDAIP is an amphiphilic molecule that integrates into the lipid bilayers of the stratum corneum.[1] Its mechanism is primarily biophysical and can be summarized in two key actions:

- Disruption of Lipid Bilayer: The lipophilic dodecyl chain of DDAIP inserts into the highly ordered intercellular lipid lamellae of the stratum corneum, disrupting their structure and increasing their fluidity.
- Loosening of Tight Junctions: DDAIP temporarily modifies the proteinaceous tight junctions between skin cells, creating transient openings that allow for the passage of larger or more hydrophilic drug molecules.[1][2]

This dual-action mechanism is temporary and reversible, allowing the skin barrier to recover its normal function after the formulation is cleared.

© 2026 BenchChem. All rights reserved.

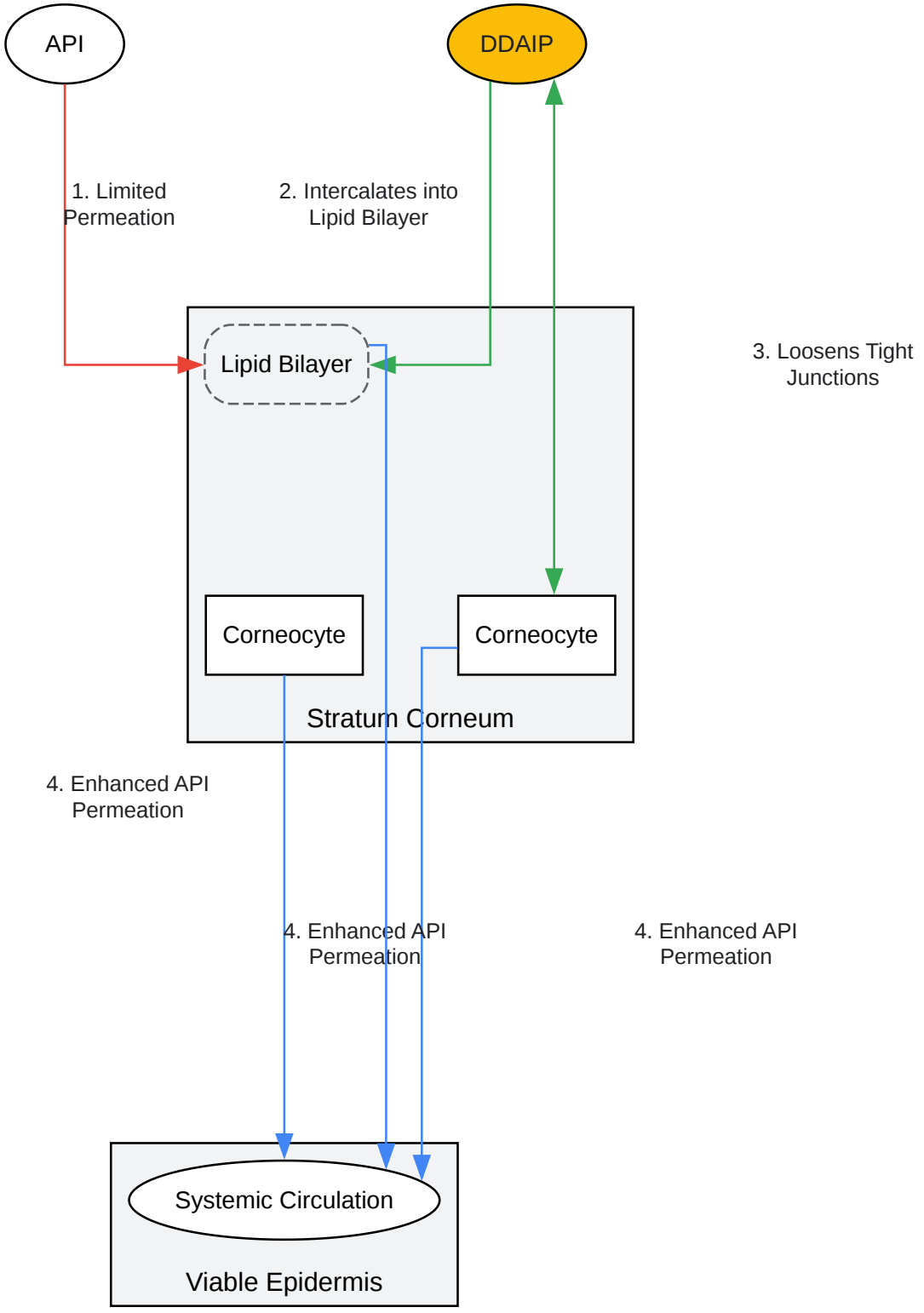

Figure 1: Proposed Mechanism of DDAIP as a Skin Permeation Enhancer

Click to download full resolution via product page

Figure 1: Proposed Mechanism of DDAIP as a Skin Permeation Enhancer

© 2026 BenchChem. All rights reserved.

Quantitative Data on DDAIP Concentrations

Publicly available data from clinical and non-clinical studies provide a practical range for investigating the optimal concentration of DDAIP. A concentration of 2.5% w/w has been established in an approved pharmaceutical product, while other studies have explored concentrations from 1% to 5%.[3]

Concentration (% w/w)	Application / Context	Observed Effects / Notes	Reference
1.0%	Non-clinical toxicology studies	Used in intravaginal administration tests in rabbits, causing some edema and erythema.	
2.5%	Approved pharmaceutical product (Vitaros™ cream)	Established as an effective concentration for enhancing the permeation of alprostadil.	[3]
5.0%	Non-clinical toxicology studies	Caused reversible adverse effects (e.g., damage to seminiferous tubules) in some rabbits after topical application.	

Protocols for Determining Optimal Concentration

The optimal concentration of DDAIP is formulation and API-dependent. A series of experiments is required to balance efficacy (permeation enhancement) with safety (low irritation potential). The following protocols outline a standard workflow for this determination.

© 2026 BenchChem. All rights reserved.

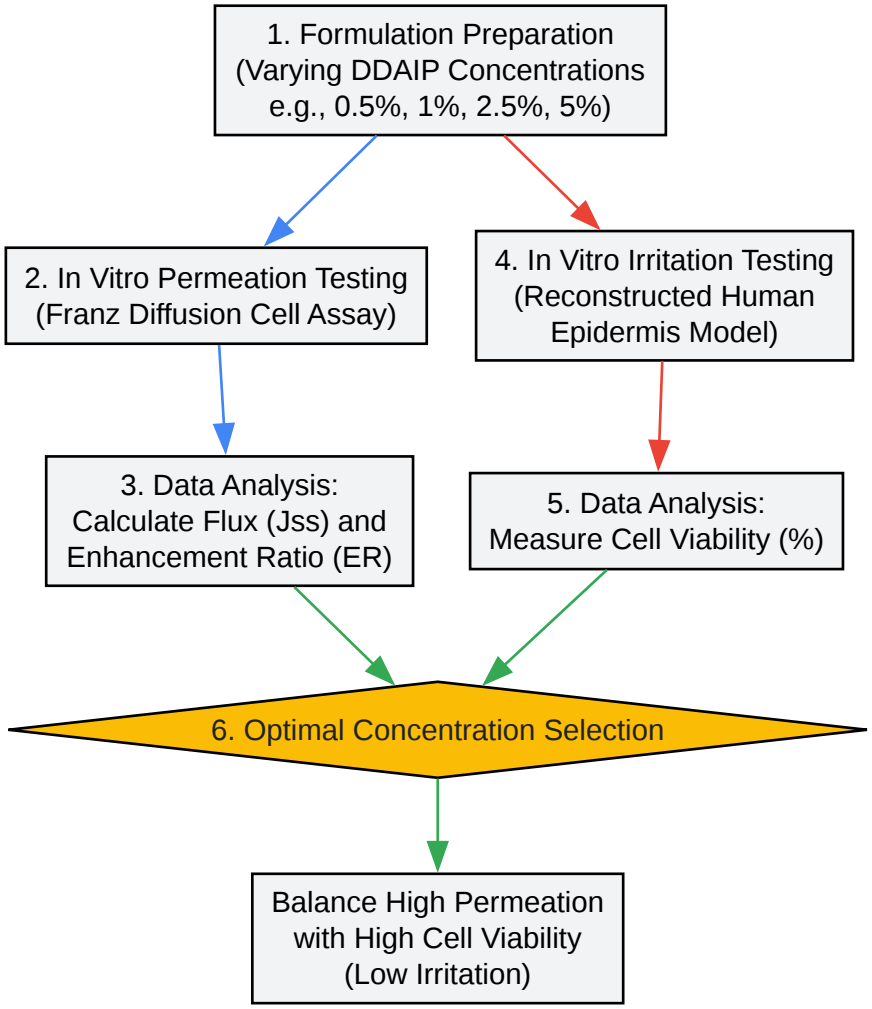

Figure 2: Experimental Workflow for Optimal Concentration Determination

Click to download full resolution via product page

Figure 2: Experimental Workflow for Optimal Concentration Determination

Protocol 1: In Vitro Skin Permeation Study using Franz Diffusion Cells

This protocol determines the effect of different DDAIP concentrations on the transdermal flux of a specific API.[6][7]

1. Objective: To quantify the permeation enhancement of an API across a skin membrane as a function of DDAIP concentration.

2. Materials:

© 2026 BenchChem. All rights reserved.

- Franz Diffusion Cells (static, vertical type)[8]
- Human or animal skin membrane (e.g., excised human skin, porcine skin)
- Receptor fluid (e.g., phosphate-buffered saline with a solubility enhancer like polysorbate 80, if needed)
- Test Formulations: Vehicle with 0% DDAIP (control) and vehicle with various concentrations of DDAIP (e.g., 0.5%, 1.0%, 2.5%, 5.0% w/w), each containing a fixed concentration of the API.
- Magnetic stirrer and stir bars
- Water bath or heating block to maintain 32-37°C
- High-Performance Liquid Chromatography (HPLC) or other suitable analytical method for API quantification.

3. Methodology:

- Membrane Preparation: Thaw and cut skin to a size sufficient to cover the receptor chamber opening. Equilibrate the skin in receptor fluid.
- Franz Cell Assembly: Mount the skin membrane between the donor and receptor chambers, ensuring the stratum corneum faces the donor chamber.[6]
- Receptor Chamber Filling: Fill the receptor chamber with pre-warmed, de-gassed receptor fluid. Ensure no air bubbles are trapped beneath the membrane.[9]
- Equilibration: Place the assembled cells in the heating block and allow the system to equilibrate to the target temperature (typically 32°C for skin surface) for at least 30 minutes.
- Formulation Application: Apply a finite dose (e.g., 5-10 mg/cm^2) of the test formulation evenly onto the skin surface in the donor chamber.
- Sampling: At predetermined time points (e.g., 0, 1, 2, 4, 6, 8, 12, 24 hours), withdraw an aliquot (e.g., 200 µL) from the receptor chamber via the sampling arm. Immediately replace the withdrawn volume with fresh, pre-warmed receptor fluid.[6]

© 2026 BenchChem. All rights reserved.

- Sample Analysis: Analyze the collected samples for API concentration using a validated analytical method (e.g., HPLC).

4. Data Analysis:

- Calculate Cumulative Amount: For each time point, calculate the cumulative amount of API permeated per unit area (Q, in µg/cm²), correcting for sample removal.
- Determine Steady-State Flux (Jss): Plot the cumulative amount permeated (Q) versus time. The slope of the linear portion of this curve represents the steady-state flux (Jss, in µg/cm²/h).[6]
- Calculate Enhancement Ratio (ER): The ER is the ratio of the flux from a formulation containing DDAIP to the flux from the control formulation (0% DDAIP).
  - ER = Jss (with DDAIP) / Jss (control)

DDAIP Conc. (% w/w)	Mean Steady-State Flux (Jss) (µg/cm²/h)	Enhancement Ratio (ER)
0 (Control)	[Insert Data]	1.0
0.5	[Insert Data]	[Calculate]
1.0	[Insert Data]	[Calculate]
2.5	[Insert Data]	[Calculate]
5.0	[Insert Data]	[Calculate]

Protocol 2: In Vitro Skin Irritation Test (OECD 439)

This protocol assesses the potential of different DDAIP concentrations to cause skin irritation using a reconstructed human epidermis (RhE) model.[10][11]

1. Objective: To evaluate the cytotoxicity of formulations with varying DDAIP concentrations as a predictor of skin irritation potential.

2. Materials:

© 2026 BenchChem. All rights reserved.

- Reconstructed human epidermis tissue models (e.g., EpiDerm™, EpiSkin™)
- Assay medium provided by the tissue manufacturer
- Test Formulations: Same as in Protocol 1.
- Negative Control: Phosphate-buffered saline (PBS)
- Positive Control: 5% Sodium Dodecyl Sulfate (SDS)
- MTT reagent (3-(4,5-dimethylthiazol-2-yl)-2,5-diphenyltetrazolium bromide)
- Isopropanol or acid-isopropanol
- Plate reader (spectrophotometer)

3. Methodology:

- Tissue Pre-incubation: Upon receipt, place the RhE tissue inserts into a 6-well plate containing pre-warmed assay medium and incubate for at least 1 hour at 37°C, 5% CO_2.
- Formulation Application: Remove medium and apply the test formulations, negative control, and positive control directly to the tissue surface (typically 25-50 µL).
- Exposure: Incubate for a defined period (e.g., 60 minutes).[12]
- Washing: Thoroughly wash the tissues with PBS to remove the test substance.
- MTT Incubation: Transfer tissues to fresh medium containing MTT and incubate for 3 hours. Viable cells will reduce the yellow MTT to a purple formazan precipitate.
- Formazan Extraction: Extract the formazan precipitate from the tissues by incubating them in isopropanol for at least 2 hours.
- Quantification: Measure the optical density (OD) of the extracted formazan solution using a plate reader (e.g., at 570 nm).

4. Data Analysis:

© 2026 BenchChem. All rights reserved.

- Calculate Percent Viability: For each formulation, calculate the percent viability relative to the negative control.
  - % Viability = (OD of test formulation / OD of negative control) x 100
- Classification: According to OECD TG 439, if the mean tissue viability is ≤ 50%, the substance is classified as an irritant.[10]

DDAIP Conc. (% w/w)	Mean % Tissue Viability	Irritation Potential
0 (Control)	100% (by definition)	Non-irritant
0.5	[Insert Data]	[Determine]
1.0	[Insert Data]	[Determine]
2.5	[Insert Data]	[Determine]
5.0	[Insert Data]	[Determine]
Positive Control (5% SDS)	< 50%	Irritant

Conclusion and Recommendation

The optimal concentration of DDAIP in a topical formulation represents a balance between maximizing drug delivery and ensuring patient safety. The data from the permeation and irritation studies should be analyzed together to identify the concentration that provides the highest enhancement ratio while maintaining high cell viability (e.g., >50%). Based on existing literature, a concentration range of 1.0% to 2.5% w/w is a logical starting point for investigation.[3] The protocols provided herein offer a robust framework for generating the necessary data to justify the selection of an optimal DDAIP concentration for any given API and vehicle system.

© 2026 BenchChem. All rights reserved.

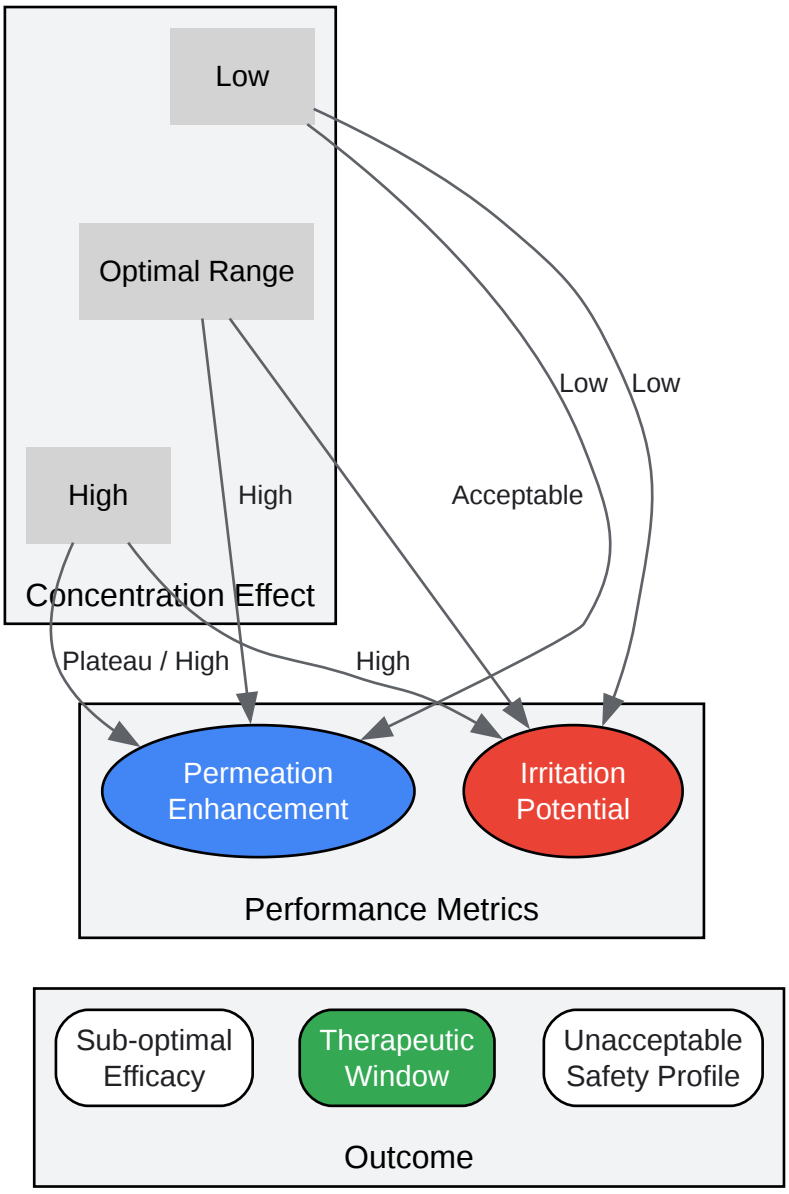

Figure 3: Conceptual Relationship of DDAIP Concentration to Efficacy and Safety

Click to download full resolution via product page

Figure 3: Conceptual Relationship of DDAIP Concentration to Efficacy and Safety

Need Custom Synthesis?

BenchChem offers custom synthesis for rare earth carbides and specific isotopiclabeling.

Email: info@benchchem.com or Request Quote Online.

References

- 1. DDAIP - Wikipedia [en.wikipedia.org]
- 2. New route to enhance drug permeation [manufacturingchemist.com]
- 3. researchgate.net [researchgate.net]
- 4. Erectile dysfunction - Wikipedia [en.wikipedia.org]
- 5. researchgate.net [researchgate.net]
- 6. benchchem.com [benchchem.com]
- 7. mdpi.com [mdpi.com]
- 8. Validation of a Static Franz Diffusion Cell System for In Vitro Permeation Studies - PMC [pmc.ncbi.nlm.nih.gov]
- 9. youtube.com [youtube.com]
- 10. iivs.org [iivs.org]
- 11. Dermal Irritation [lnhlifesciences.org]
- 12. cnb.drirenaeris.com [cnb.drirenaeris.com]

- To cite this document: BenchChem. [Optimal concentration of DDAIP in topical formulations]. BenchChem, [2026]. [Online PDF]. Available at: [https://www.benchchem.com/product/b1313087/docs#optimal-concentration-of-ddaip-in-topical-formulations]

Disclaimer & Data Validity:

The information provided in this document is for Research Use Only (RUO) and is strictly not intended for diagnostic or therapeutic procedures. While BenchChem strives to provide accurate protocols, we make no warranties, express or implied, regarding the fitness of this product for every specific experimental setup.

Technical Support: The protocols provided are for reference purposes. Unsure if this reagent suits your experiment?

Need Industrial/Bulk Grade? Request Custom Synthesis Quote

© 2026 BenchChem. All rights reserved.

BenchChem

Our mission is to be the trusted global source of essential and advanced chemicals, empowering scientists and researchers to drive progress in science and industry.

Contact

Address: 3281 E Guasti Rd

Ontario, CA 91761, United States

Phone: (601) 213-4426

Email: info@benchchem.com

Contact our Ph.D. Support Team for a compatibility check

© 2026 BenchChem. All rights reserved.