The Molecular Architecture: Understanding the Substituent Effects

Author: BenchChem Technical Support Team. **Date**: May 2026

Compound of Interest

Compound Name:	*3-Methoxy-5-nitrobenzoic acid*
CAS No.:	*78238-12-7*
Cat. No.:	*B1312149*

Get Quote

The reactivity of any substituted benzene ring is a direct consequence of the electronic properties of its substituents. In **3-Methoxy-5-nitrobenzoic acid**, we have a competing system of one electron-donating group (EDG) and two electron-withdrawing groups (EWGs).

- Nitro Group ($-NO_2$): This is one of the most powerful EWGs in organic chemistry. It deactivates the aromatic ring towards electrophilic attack through both a strong inductive effect (-I) and a resonance effect (-R). For electrophilic aromatic substitution (EAS), it is a strong meta-director.[1][2][3] Conversely, it activates the ring for nucleophilic aromatic substitution (SNAr), especially when positioned ortho or para to a suitable leaving group.[4][5][6]

- Carboxylic Acid Group (-COOH): This group is also an EWG and deactivates the ring towards EAS, acting as a meta-director.[1][2] Its deactivating effect is less pronounced than that of the nitro group.

- Methoxy Group ($-OCH_3$): The methoxy group is an activating group. While it is electron-withdrawing inductively (-I) due to the oxygen's electronegativity, its powerful electron-

© 2026 BenchChem. All rights reserved.

donating resonance effect (+R) is dominant, enriching the electron density of the ring, particularly at the ortho and para positions.[7]

Table 1: Summary of Substituent Properties

Substituent	Electronic Effect	Ring Activity (towards EAS)	Directing Effect (for EAS)
$-NO_2$	Electron-Withdrawing (-I, -R)	Strongly Deactivating	meta
-COOH	Electron-Withdrawing (-I, -R)	Deactivating	meta
$-OCH_3$	Electron-Donating (+R > -I)	Activating	ortho, para

The Electronic Landscape and Aromatic Ring Reactivity

The arrangement of these three groups on the benzene ring creates a unique electronic environment that heavily influences its reaction pathways.

© 2026 BenchChem. All rights reserved.

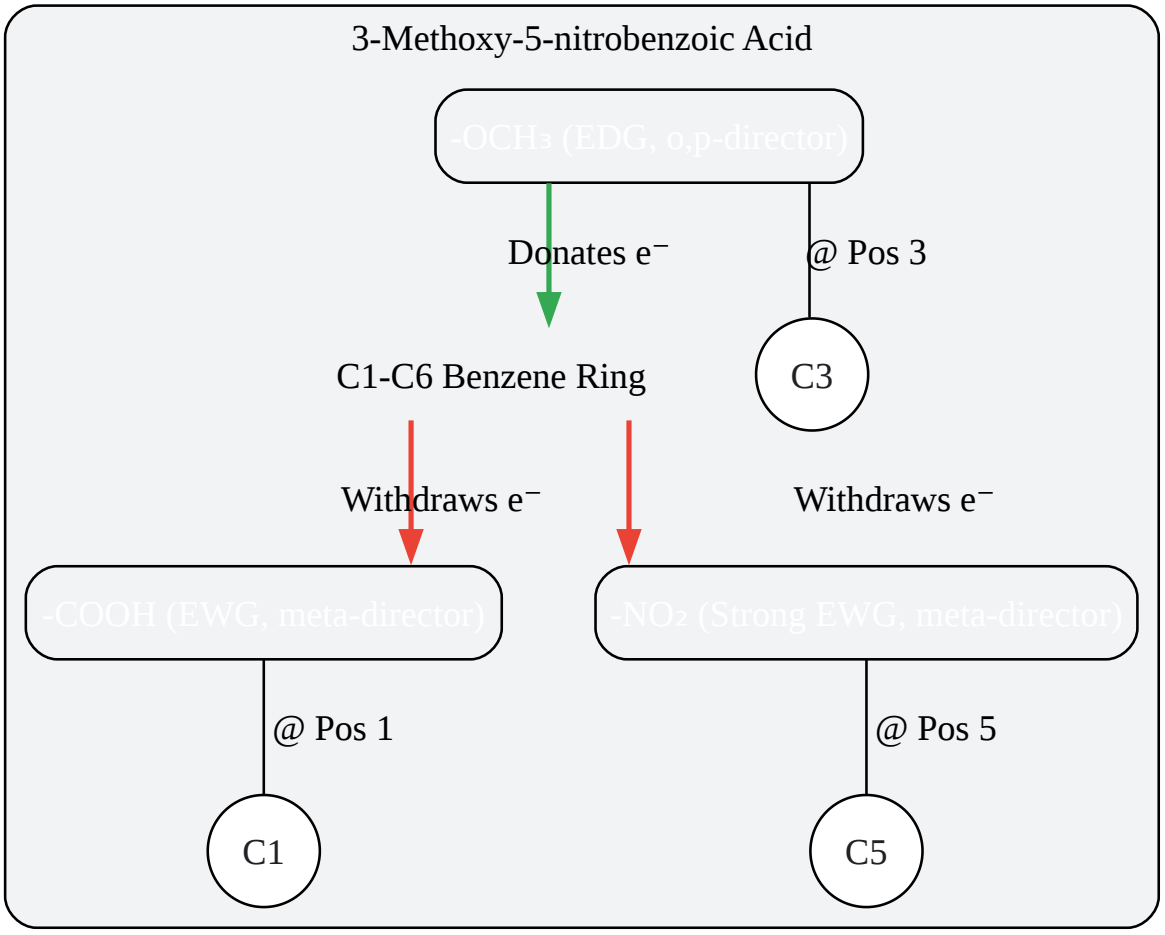

Click to download full resolution via product page

Electronic influences of substituents on the aromatic core.

Electrophilic Aromatic Substitution (EAS)

The presence of two strong deactivating groups (-NO_2 and -COOH) renders the aromatic ring highly electron-deficient and thus, resistant to attack by electrophiles.[8][9] While the methoxy group does activate the ring, its effect is largely overcome by the powerful deactivation from the other two substituents. Any potential EAS reaction would be sluggish and require harsh conditions. The directing effects are also in conflict: the methoxy group directs to positions 2, 4, and 6, while the nitro and carboxylic acid groups direct to the already substituted positions. Therefore, further substitution on the ring is synthetically challenging and generally not a preferred reactive pathway.

© 2026 BenchChem. All rights reserved.

Nucleophilic Aromatic Substitution (SNAr)

A standard SNAr reaction requires two key features: (1) one or more strong electron-withdrawing groups, and (2) a good leaving group, such as a halide, positioned ortho or para to the EWG.[4][6] **3-Methoxy-5-nitrobenzoic acid** lacks a conventional leaving group. The substituents (-OCH_3, -COOH) are not readily displaced by nucleophiles under standard SNAr conditions. The meta arrangement of the EWGs relative to each other also fails to provide the necessary resonance stabilization for a Meisenheimer complex intermediate, which is crucial for the reaction to proceed.[6] Consequently, SNAr is not a viable reactive pathway for this molecule.

The Primary Reactive Pathway: Reduction of the Nitro Group

The most synthetically valuable and reliable transformation involving **3-Methoxy-5-nitrobenzoic acid** is the reduction of the nitro group to a primary amine (-NH_2). This reaction converts the starting material into 3-Amino-5-methoxybenzoic acid, a versatile building block.[10][11] This conversion fundamentally changes the electronic character of the molecule, replacing a powerful EWG with a strong EDG, thereby opening up new avenues for subsequent chemical modifications.

Catalytic Hydrogenation

This is often the cleanest method for nitro group reduction, producing water as the only byproduct.

- Causality Behind Experimental Choices: The choice of catalyst (e.g., Palladium on Carbon, Platinum(IV) oxide) is critical. Pd/C is highly effective and widely used due to its efficiency and relative cost-effectiveness. The solvent must be inert to hydrogenation and capable of dissolving the starting material; alcohols like ethanol or methanol are common choices. The reaction is run under a positive pressure of hydrogen gas to ensure a sufficient supply of the reducing agent to the catalyst surface.

Protocol 3.1.1: Catalytic Hydrogenation using Pd/C

© 2026 BenchChem. All rights reserved.

- Vessel Preparation: To a heavy-walled hydrogenation flask, add **3-Methoxy-5-nitrobenzoic acid** (1.0 eq).
- Catalyst Addition: Add 10% Palladium on Carbon (Pd/C) (typically 5-10 mol %). The catalyst should be handled carefully as it can be pyrophoric.
- Solvent Addition: Add a suitable solvent, such as ethanol or ethyl acetate, to dissolve the substrate.
- Inerting: Seal the vessel and purge the system with an inert gas (e.g., nitrogen or argon) to remove all oxygen.
- Hydrogenation: Introduce hydrogen gas (typically from a balloon or a pressurized cylinder) and stir the mixture vigorously at room temperature until the reaction is complete (monitored by TLC or LC-MS).
- Work-up: Once complete, carefully vent the hydrogen and purge the system again with an inert gas. Filter the reaction mixture through a pad of Celite® to remove the Pd/C catalyst.
- Isolation: Concentrate the filtrate under reduced pressure to yield the crude 3-Amino-5-methoxybenzoic acid, which can be further purified by recrystallization.

Metal-Acid Reduction (e.g., $SnCl_2$)

Reduction using metals in acidic media is a classic and robust method. Tin(II) chloride ($SnCl_2$) in a polar protic solvent is particularly effective and common for laboratory-scale synthesis.

- Causality Behind Experimental Choices: Tin(II) chloride is a mild reducing agent that is highly selective for the nitro group, leaving other functional groups like the carboxylic acid and ether linkage intact. The reaction is typically run in ethanol to dissolve the substrate, and concentrated hydrochloric acid is often added to facilitate the reaction and protonate the resulting amine, forming a salt which can sometimes aid in purification.

Experimental Workflow: Synthesis of 3-Amino-5-methoxybenzoic acid via $SnCl_2$ Reduction

This section provides a self-validating, step-by-step protocol for the reduction of the nitro group.

© 2026 BenchChem. All rights reserved.

Detailed Step-by-Step Protocol

- Reaction Setup: In a round-bottom flask equipped with a magnetic stir bar and a reflux condenser, dissolve **3-Methoxy-5-nitrobenzoic acid** (e.g., 5.0 g, 25.4 mmol) in ethanol (100 mL).
- Reagent Addition: To this solution, add Tin(II) chloride dihydrate ($SnCl_2 \cdot 2H_2O$) (e.g., 28.6 g, 127 mmol, 5.0 eq) in one portion.
- Reaction: Heat the mixture to reflux (approx. 78 °C) and stir vigorously. The reaction progress can be monitored by Thin Layer Chromatography (TLC) until the starting material is fully consumed (typically 2-4 hours).
- Quenching & pH Adjustment: Cool the reaction mixture to room temperature and then place it in an ice bath. Slowly and carefully add a saturated aqueous solution of sodium bicarbonate ($NaHCO_3$) to neutralize the acid and precipitate the tin salts. Adjust the pH to ~7-8.
- Extraction: Transfer the mixture to a separatory funnel and extract the aqueous layer with ethyl acetate (3 x 100 mL). The product will move into the organic layer.
- Washing: Combine the organic layers and wash with brine (1 x 50 mL) to remove residual water and salts.
- Drying and Concentration: Dry the organic layer over anhydrous sodium sulfate (Na_2SO_4), filter, and concentrate the solvent under reduced pressure using a rotary evaporator.
- Purification: The resulting crude solid can be purified by recrystallization from an appropriate solvent system (e.g., ethanol/water) to yield pure 3-Amino-5-methoxybenzoic acid.

Data Presentation and Characterization

© 2026 BenchChem. All rights reserved.

Compound	Molecular Formula	Molar Mass (g/mol)	Appearance	Expected Yield	Melting Point (°C)
3-Methoxy-5-nitrobenzoic acid	$C_8H_7NO_5$	197.14	Off-white to yellow solid	-	197-200
3-Amino-5-methoxybenzoic acid	$C_8H_9NO_3$	167.16	Solid	>85%	149-153

Workflow Visualization

© 2026 BenchChem. All rights reserved.

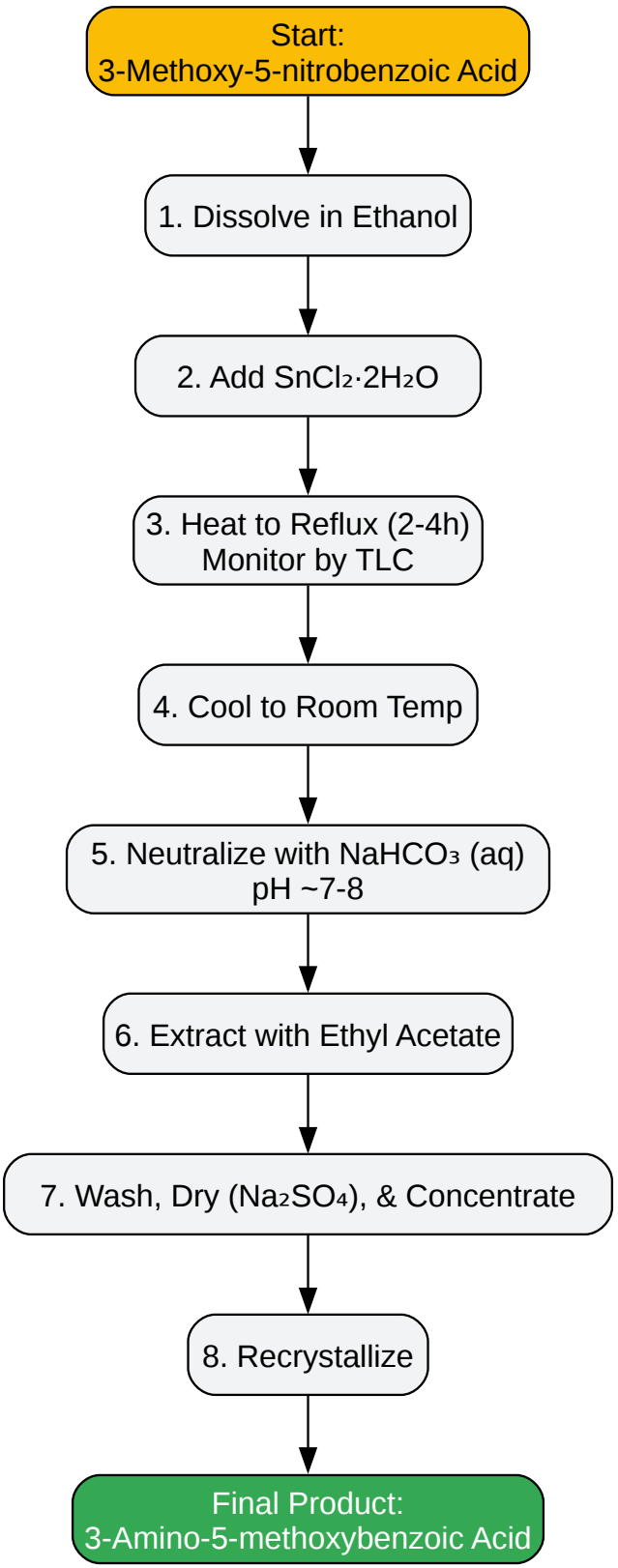

Click to download full resolution via product page

*Experimental workflow for the reduction of **3-Methoxy-5-nitrobenzoic acid**.*

© 2026 BenchChem. All rights reserved.

Conclusion: Synthetic Utility and Field Applications

In summary, the reactivity of the nitro group is the dominant and most synthetically useful feature of **3-Methoxy-5-nitrobenzoic acid**. While the aromatic ring is deactivated to most substitution reactions, the nitro group serves as a robust precursor to a primary amine. The selective reduction to 3-Amino-5-methoxybenzoic acid is a high-yielding and reliable transformation that fundamentally alters the molecule's electronic properties, paving the way for further functionalization. This product is a valuable intermediate in medicinal chemistry and drug development, where the amino and carboxylic acid groups can be readily modified to construct complex molecular architectures and explore structure-activity relationships.

References

- Vedantu. (n.d.). Is nitrobenzene more reactive than benzoic acid for class 11 chemistry CBSE. Retrieved from [Link]
- askIITians. (2025, March 8). Is nitrobenzene more reactive than benzoic acid for electrophilic substitution?. Retrieved from [Link]
- Quora. (2021, June 11). Which of the following is more reactive among benzene, Nitro benzene, benzoic acid and phenol?. Retrieved from [Link]
- Wikipedia. (n.d.). 3-Nitrobenzoic acid. Retrieved from [Link]
- Quora. (2017, February 19). Why does Nitrobenzene lower the reactivity of Benzene ring?. Retrieved from [Link]
- Journal of the Chemical Society, Perkin Transactions 1. (n.d.). Direct methoxylation of nitroarenes and nitroazaarenes with alkaline methoxides via nucleophilic displacement of an aromatic hydrogen atom. Retrieved from [Link]
- Wikipedia. (n.d.). Nucleophilic aromatic substitution. Retrieved from [Link]
- Master Organic Chemistry. (2018, August 20). Nucleophilic Aromatic Substitution: Introduction and Mechanism. Retrieved from [Link]

© 2026 BenchChem. All rights reserved.

- Quora. (2022, September 5). Why does nitrobenzene undergo an electrophilic aromatic substitution reaction at meta position? Can you explain why the NO2 group is meta directing towards electrophobic aromatic substitution?. Retrieved from [Link]
- OpenStax. (2023, September 20). 16.6 Nucleophilic Aromatic Substitution. Organic Chemistry. Retrieved from [Link]
- Chemistry LibreTexts. (2021, December 11). 8.11: Multiple Substituents- Directing Effects. Retrieved from [Link]
- SLS. (n.d.). 3-Amino-5-methoxybenzoic acid, 97%. Retrieved from [Link]

Need Custom Synthesis?

BenchChem offers custom synthesis for rare earth carbides and specific isotopiclabeling.

Email: info@benchchem.com or Request Quote Online.

Sources

- 1. Is nitrobenzene more reactive than benzoic acid for class 11 chemistry CBSE [vedantu.com]
- 2. quora.com [quora.com]
- 3. quora.com [quora.com]
- 4. Nucleophilic aromatic substitution - Wikipedia [en.wikipedia.org]
- 5. masterorganicchemistry.com [masterorganicchemistry.com]
- 6. 16.6 Nucleophilic Aromatic Substitution - Organic Chemistry | OpenStax [openstax.org]
- 7. benchchem.com [benchchem.com]
- 8. 3-Nitrobenzoic acid - Wikipedia [en.wikipedia.org]
- 9. Reactivity and Polarity of 3-Nitrobenzoic acid_Chemicalbook [chemicalbook.com]
- 10. 3-Amino-5-methoxybenzoic acid | 74165-74-5 | FA67923 [biosynth.com]
- 11. scientificlabs.co.uk [scientificlabs.co.uk]
- To cite this document: BenchChem. [The Molecular Architecture: Understanding the Substituent Effects]. BenchChem, [2026]. [Online PDF]. Available at:

[https://www.benchchem.com/product/b1312149/docs#the-molecular-architecture-understanding-the-substituent-effects]

Disclaimer & Data Validity:

The information provided in this document is for Research Use Only (RUO) and is strictly not intended for diagnostic or therapeutic procedures. While BenchChem strives to provide accurate protocols, we make no warranties, express or implied, regarding the fitness of this product for every specific experimental setup.

Technical Support: The protocols provided are for reference purposes. Unsure if this reagent suits your experiment?

Need Industrial/Bulk Grade? Request Custom Synthesis Quote

BenchChem

Our mission is to be the trusted global source of essential and advanced chemicals, empowering scientists and researchers to drive progress in science and industry.

Contact

Address: 3281 E Guasti Rd

Ontario, CA 91761, United States

Phone: (601) 213-4426

Email: info@benchchem.com

Contact our Ph.D. Support Team for a compatibility check