Technical Support Center: Interpreting NMR Spectra of Complex Spirohydantoins

Author: BenchChem Technical Support Team. **Date**: May 2026

Compound of Interest

Compound Name:	*(2,4-Dioxo-1,3-diaza-spiro[4.4]non-3-yl)-acetic acid*
CAS No.:	*714-72-7*
Cat. No.:	*B1309652*

Get Quote

Welcome to the technical support center for the structural elucidation of complex spirohydantoins. As a class of compounds with significant therapeutic potential, particularly as anticonvulsants and antiarrhythmic agents, their structural verification is paramount.[1][2] The unique three-dimensional architecture, centered around a quaternary spiro-carbon, introduces significant challenges in NMR spectral interpretation. This guide is structured in a question-and-answer format to directly address the common and complex issues encountered by researchers in the field. It provides not only solutions but also the underlying principles to empower you to tackle unforeseen challenges.

Frequently Asked Questions & Troubleshooting Guides

Question 1: Why do the two protons of a methylene group (CH_2) near the spiro-center appear as two distinct and complex signals instead of a single peak?

Answer:

This phenomenon is due to the presence of diastereotopic protons. The spiro-carbon atom is a quaternary stereocenter, which makes the molecule chiral. Even if other stereocenters are absent, the spiro-center renders the local environment asymmetric.

- Causality: A methylene group (CH_2) adjacent to this chiral center has two protons, let's call them H_a and H_e. Because of the fixed, three-dimensional structure of the spiro-rings, H_a and H_e are in chemically non-equivalent environments.[3][4] One proton might be oriented 'axially' relative to a ring system, while the other is 'equatorial', or one might be closer to an electronegative substituent than the other. They cannot be interchanged by simple bond rotation or any symmetry operation within the molecule.[5]

- Spectral Manifestation: Consequently, these diastereotopic protons have different chemical shifts (δ) and will couple not only to neighboring protons but also to each other (geminal coupling, ^2JHH). This results in two separate signals, often appearing as a pair of complex multiplets or, in simpler cases, two doublets of doublets (dd).[4]

- Troubleshooting & Confirmation: The best way to confirm that two protons are a diastereotopic pair is to use a 2D ^1H-^1H COSY (Correlation Spectroscopy) experiment. You will observe a cross-peak connecting the two distinct signals, confirming their geminal coupling relationship.[6]

Question 2: My ^1H NMR spectrum is a crowded, overlapping mess, especially in the 1-4 ppm region. What is the standard workflow to systematically assign these signals?

Answer:

Signal overlap is the most common hurdle for molecules of this complexity. A one-dimensional ^1H NMR spectrum is rarely sufficient for a complete assignment. A systematic, multi-dimensional approach is required. The workflow below is a field-proven strategy for dissecting complex spectra.[6][7]

© 2026 BenchChem. All rights reserved.

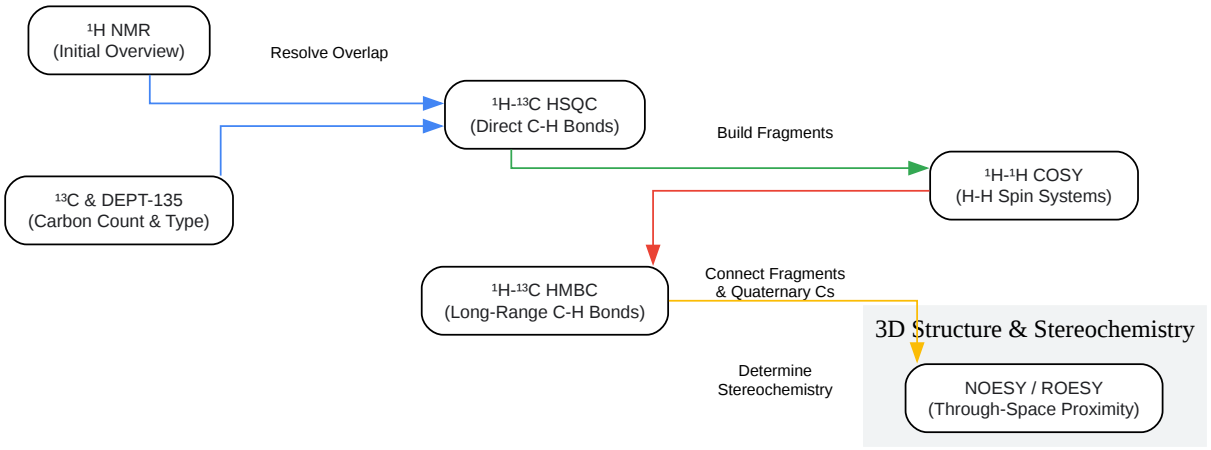

Click to download full resolution via product page

Caption: Standard workflow for spirohydantoin structure elucidation.

Workflow Explanation:

- Carbon Count & Type (^{13}C & DEPT): First, acquire a ^{13}C spectrum to count the number of unique carbons. A DEPT-135 experiment will then differentiate between CH/CH_3 (positive signals) and CH_2 (negative signals), while quaternary carbons will be absent.[6]

- Direct C-H Attachment (^{1}H-^{13}C HSQC): The Heteronuclear Single Quantum Coherence (HSQC) experiment is the most critical step for resolving overlap. It generates a 2D plot where each peak correlates a proton signal with the signal of the carbon it is directly attached to.[8] This immediately spreads the crowded proton signals out over the wider carbon chemical shift range, allowing for unambiguous assignment of each C-H pair.

- Build Spin Systems (^{1}H-^{1}H COSY): With C-H pairs identified, use the COSY spectrum to connect them. Cross-peaks in a COSY spectrum show which protons are coupling to each other (typically through 2 or 3 bonds).[9][10] This allows you to build molecular fragments, like a chain of -CH_2-CH-CH_2-.

© 2026 BenchChem. All rights reserved.

- Connect the Pieces (^{1}H-^{13}C HMBC): The Heteronuclear Multiple Bond Correlation (HMBC) experiment is the key to assembling the full structure. It reveals correlations between protons and carbons that are 2 or 3 bonds away.[6][11] This is essential for connecting the fragments you built with COSY and, crucially, for identifying and assigning quaternary carbons (like the spiro-carbon and carbonyls), which have no attached protons.[8]

Question 3: How can I definitively determine the relative stereochemistry? The spiro-center creates multiple diastereomers.

Answer:

Determining relative stereochemistry requires probing the spatial arrangement of atoms, not just their through-bond connectivity. For this, Nuclear Overhauser Effect (NOE) experiments are the gold standard.[12] These experiments detect protons that are close to each other in space (typically < 5 Å), regardless of whether they are connected by bonds.[13] The two primary experiments are NOESY and ROESY.

- NOESY (Nuclear Overhauser Effect Spectroscopy): This is the most common experiment for determining stereochemistry in small to large molecules.[14] A cross-peak between two protons indicates they are spatially proximate.

- ROESY (Rotating-frame Overhauser Effect Spectroscopy): This experiment is essential for medium-sized molecules (approx. 700-1200 Da), where the standard NOE effect can be zero or very weak, making signals disappear in a NOESY spectrum.[15][16] For spirohydantoins, which often fall in this range, ROESY can be more reliable. A key advantage is that ROESY cross-peaks always have an opposite phase to the diagonal peaks, which helps distinguish them from artifacts related to chemical exchange.[15]

© 2026 BenchChem. All rights reserved.

Feature	2D NOESY	2D ROESY
Primary Use	Small (< 600 Da) & Large (> 1200 Da) molecules	Medium-sized molecules (700-1200 Da) or when NOESY fails[15][16]
Mechanism	Through-space dipolar coupling	Spin-locking field, through-space coupling
Artifacts	Spin diffusion can lead to false positives in large molecules	TOCSY artifacts can appear, but are distinguishable by phase[15]
Cross-Peak Phase	Same phase as diagonal for large molecules; opposite for small[15]	Always opposite phase to the diagonal[15]

Experimental Protocol: 2D NOESY for Stereochemistry Assignment

- Sample Preparation: Prepare a sample of 5-10 mg of the purified spirohydantoin in 0.6 mL of a suitable deuterated solvent (e.g., DMSO-d_6, $CDCl_3$). The sample must be free of paramagnetic impurities (e.g., dissolved oxygen, metal ions), which can quench the NOE effect. Degas the sample with several freeze-pump-thaw cycles.
- Spectrometer Setup:
  - Tune and match the probe for both ^1H.
  - Acquire a standard ^1H spectrum and calibrate the 90° pulse width.
- NOESY Experiment Parameters:
  - Use a standard noesygpph pulse sequence.
  - Mixing Time (d8): This is the most critical parameter. It is the time during which NOE transfer occurs. Start with a mixing time of 500-800 ms. Run a series of experiments with varying mixing times (e.g., 300 ms, 500 ms, 1 s) to monitor the build-up of NOE cross-peaks and avoid spin diffusion.

© 2026 BenchChem. All rights reserved.

- Acquisition Time (aq): Set to acquire data for at least 0.25 s to ensure good resolution.
- Number of Scans (ns): Typically 8 to 16 scans per increment, depending on sample concentration.
- Number of Increments (in F1): Use at least 256-512 increments for adequate resolution in the indirect dimension.

- Data Processing & Interpretation:
  - Apply a squared sine-bell window function in both dimensions and perform a 2D Fourier transform.
  - Phase the spectrum carefully.
  - Look for off-diagonal cross-peaks. A peak at coordinates (δ_1, δ_2) indicates that the proton at chemical shift δ_1 is spatially close to the proton at δ_2. Map these correlations onto your 2D structure to build a 3D model.

Question 4: Even with a full suite of 2D NMR data, some assignments are ambiguous. Can computational methods provide a definitive answer?

Answer:

Yes. When experimental data is insufficient to distinguish between possible isomers, computational chemistry offers a powerful solution for structure verification.[17][18] The standard method involves calculating the NMR chemical shifts for all possible diastereomers using Density Functional Theory (DFT) and comparing the predicted spectra to the experimental data.[17][18]

The DP4+ probability analysis is a widely accepted statistical method for this purpose.[19] It compares the goodness-of-fit between the experimental ^{1}H and ^{13}C chemical shifts and the computed shifts for each candidate isomer, providing a probability score for each structure being the correct one.

© 2026 BenchChem. All rights reserved.

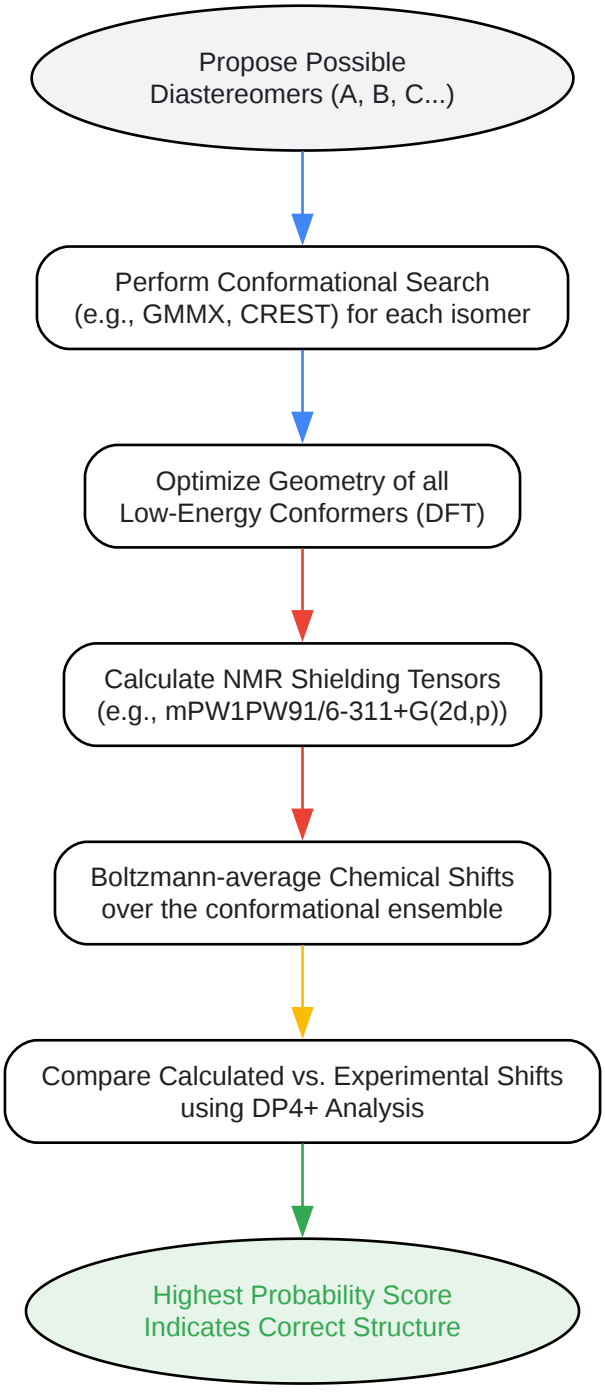

Click to download full resolution via product page

Caption: Workflow for computational structure verification using DP4+.

This approach is particularly valuable for complex spirocyclic systems where subtle conformational differences can significantly impact chemical shifts. It serves as an unbiased,

© 2026 BenchChem. All rights reserved.

quantitative method to finalize a structural assignment when traditional methods are inconclusive.[19][20]

References

- Marinov, M., Frenkeva, M., Naydenova, E., Penchev, P., & Stoyanov, N. (2022). SYNTHESIS AND CHARACTERIZATION OF N3-ACETYL DERIVATIVES OF SPIROHYDANTOINS. Journal of Chemical Technology and Metallurgy, 57(1), 25-32. [Link]
- Trigo, G. G., Martínez, M. M., & Gálvez, E. G. (1981). PMR and 13C-NMR Spectroscopy of Tropane and N-Substituted Nortropane Spirohydantoins. Journal of Pharmaceutical Sciences, 70(1), 87-89. [Link]
- University of Wisconsin-Madison Chemistry Department. (2018). NOESY and ROESY. NMR Facility Documentation. [Link]
- Barakat, A., et al. (2023). Synthesis and Characterization of New Spirooxindoles Including Triazole and Benzimidazole Pharmacophores via [3+2] Cycloaddition Reaction: An MEDT Study of the Mechanism and Selectivity. Molecules, 28(20), 7088. [Link]
- UCSD SSPPS NMR Facility. (2015). NOESY and ROESY. UCSD Chemistry and Biochemistry. [Link]
- Moser, A. (2009). Stereochemistry Information from NOESY/ROESY data … Part 2. ACD/Labs Blog. [Link]
- Merrill, A. T., et al. (2023). NMR Prediction with Computational Chemistry. ResearchGate. [Link]
- Moser, A. (2009). Stereochemistry Information from NOESY/ROESY data … Part 1. ACD/Labs Blog. [Link]
- Jan. (2016). How to differentiate diastereotopic protons by NMR in flexible groups? Chemistry Stack Exchange. [Link]
- Li, Y., et al. (2013). Synthesis of spiro[dihydropyridine-oxindoles] via three-component reaction of arylamine, isatin and cyclopentane-1,3-dione. Beilstein Journal of Organic

© 2026 BenchChem. All rights reserved.

Chemistry, 9, 10-16. [Link]

- Fadda, A. A., et al. (2015). Synthesis and Antimicrobial Evaluations of Novel Spiro Cyclic 2-Oxindole Derivatives of N-(1H-Pyrazol-5-Yl). ResearchGate. [Link]
- Zanda, M. (2017). Synthesis, NMR analysis and applications of isotope-labelled hydantoins. Future Medicinal Chemistry, 9(13), 1547-1566. [Link]
- Jana, S., et al. (2014). Rationalized design, synthesis and pharmacological screening of amino acid linked spiro pyrrolidino oxyindole analogs through environment friendly reaction. Journal of Advanced Pharmaceutical Technology & Research, 5(4), 184-190. [Link]
- University of Calgary. (n.d.). From 1H NMR, we get: Chemical shift data (δ). Chem 351/353 Textbook. [Link]
- Luy, B., & Kessler, H. (2007). Strategies and Tools for Structure Determination of Natural Products Using Modern Methods of NMR Spectroscopy. In Natural Compounds as Drugs (pp. 331-368). Birkhäuser Basel. [Link]
- Ashenhurst, J. (2012). Homotopic, Enantiotopic, Diastereotopic. Master Organic Chemistry. [Link]
- Grimblat, N., et al. (2021). Exploring the Frontiers of Computational NMR: Methods, Applications, and Challenges. Chemical Reviews, 121(15), 9347-9397. [Link]
- Rusakov, Y. Y., & Krivdin, L. B. (2021). Computational Chemistry in Nuclear Magnetic Resonance. Magnetochemistry, 7(1), 12. [Link]
- Heravi, M. M., et al. (2015). NMR chemical shifts of spiro-carbon of compounds 245- 248 and 249, 250, and 252. ResearchGate. [Link]
- Emery Pharma. (2018). A Step-By-Step Guide to 1D and 2D NMR Interpretation. Emery Pharma Blog. [Link]
- Master Organic Chemistry. (2022). Diastereotopic Protons in 1H NMR Spectroscopy: Examples. Master Organic Chemistry. [Link]
- Chemistry LibreTexts. (2023). NMR - Interpretation. Chemistry LibreTexts. [Link]

© 2026 BenchChem. All rights reserved.

- Chemistry LibreTexts. (2025). 5.4: NOESY Spectra. Chemistry LibreTexts. [Link]
- Elyashberg, M. E., et al. (2004). Structure elucidation from 2D NMR spectra using the StrucEluc expert system: detection and removal of contradictions in the data. Journal of Chemical Information and Computer Sciences, 44(3), 771-782. [Link]
- Wagen, C. (2023). Computational NMR Prediction: A Microreview. Corin Wagen's Blog. [Link]
- The Organic Chemistry Tutor. (2023). NMR Spectroscopy Interpretation (Example). YouTube. [Link]
- Gheorghiu, M. D., et al. (2021). 1H NMR AND CONFORMATIONAL ANALYSIS OF DIASTEREOTOPIC METHYLENE PROTONS IN ACHIRAL FLEXIBLE MOLECULES. Revue Roumaine de Chimie, 66(1), 23-34. [Link]
- Scribd. (n.d.). 2D NMR Spectroscopy for Organic Compounds. Scribd. [Link]

Need Custom Synthesis?

BenchChem offers custom synthesis for rare earth carbides and specific isotopiclabeling.

Email: info@benchchem.com or Request Quote Online.

Sources

- 1. journal.uctm.edu [journal.uctm.edu]
- 2. scilit.com [scilit.com]
- 3. masterorganicchemistry.com [masterorganicchemistry.com]
- 4. masterorganicchemistry.com [masterorganicchemistry.com]
- 5. webstor.srmist.edu.in [webstor.srmist.edu.in]
- 6. emerypharma.com [emerypharma.com]
- 7. ccc.chem.pitt.edu [ccc.chem.pitt.edu]
- 8. pdf.benchchem.com [pdf.benchchem.com]
- 9. chem.libretexts.org [chem.libretexts.org]
- 10. scribd.com [scribd.com]

- 11. Structure elucidation from 2D NMR spectra using the StrucEluc expert system: detection and removal of contradictions in the data - PubMed [pubmed.ncbi.nlm.nih.gov]
- 12. acdlabs.com [acdlabs.com]
- 13. acdlabs.com [acdlabs.com]
- 14. chem.libretexts.org [chem.libretexts.org]
- 15. nmr.chem.columbia.edu [nmr.chem.columbia.edu]
- 16. UCSD SSPPS NMR Facility: NOESY and ROESY [sopnmr.blogspot.com]
- 17. Exploring the Frontiers of Computational NMR: Methods, Applications, and Challenges - PMC [pmc.ncbi.nlm.nih.gov]
- 18. Computational Chemistry in Nuclear Magnetic Resonance [mdpi.com]
- 19. comporgchem.com [comporgchem.com]
- 20. researchgate.net [researchgate.net]

- To cite this document: BenchChem. [Technical Support Center: Interpreting NMR Spectra of Complex Spirohydantoins]. BenchChem, [2026]. [Online PDF]. Available at: [https://www.benchchem.com/product/b1309652/docs#technical-support-center-interpreting-nmr-spectra-of-complex-spirohydantoins]

Disclaimer & Data Validity:

The information provided in this document is for Research Use Only (RUO) and is strictly not intended for diagnostic or therapeutic procedures. While BenchChem strives to provide accurate protocols, we make no warranties, express or implied, regarding the fitness of this product for every specific experimental setup.

Technical Support: The protocols provided are for reference purposes. Unsure if this reagent suits your experiment?

Need Industrial/Bulk Grade? Request Custom Synthesis Quote

© 2026 BenchChem. All rights reserved.

BenchChem

Our mission is to be the trusted global source of essential and advanced chemicals, empowering scientists and researchers to drive progress in science and industry.

Contact

Address: 3281 E Guasti Rd

Ontario, CA 91761, United States

Phone: (601) 213-4426

Email: info@benchchem.com

Contact our Ph.D. Support Team for a compatibility check

© 2026 BenchChem. All rights reserved.