Application Note & Protocols: Microwave-Assisted Synthesis of Benzimidazole Derivatives

Author: BenchChem Technical Support Team. **Date**: May 2026

Compound of Interest

Compound Name:	*1-butyl-1H-benzimidazol-2-amine*
CAS No.:	*91337-45-0*
Cat. No.:	*B1303733*

Get Quote

Introduction: The Benzimidazole Scaffold and the Microwave Advantage

The benzimidazole nucleus, a bicyclic heterocycle formed from the fusion of benzene and imidazole, is a cornerstone in medicinal chemistry and drug development.[1][2] Its structural similarity to natural purines allows it to readily interact with various biological macromolecules, making it a "privileged scaffold".[3] Consequently, benzimidazole derivatives exhibit a vast spectrum of pharmacological activities, including anticancer, antiviral, antimicrobial, anti-inflammatory, and antihypertensive properties.[1]

Traditionally, the synthesis of these vital compounds involves methods that require prolonged reaction times, harsh conditions, and often result in environmental pollution.[4] The advent of Microwave-Assisted Organic Synthesis (MAOS) has revolutionized this field.[5] By utilizing microwave irradiation, chemists can now achieve:

- Dramatic Rate Acceleration: Reactions that once took hours or days can be completed in minutes.[6] Microwave heating is 60–160 times faster than conventional methods for benzimidazole synthesis.[6]

© 2026 BenchChem. All rights reserved.

- Higher Yields & Purity: Efficient and uniform heating often leads to cleaner reactions with fewer byproducts, simplifying purification and increasing overall yield.[7][8]
- Energy Efficiency: Microwaves heat the reactants and solvent directly, avoiding the need to heat the entire apparatus, thus saving significant time and energy.[7][9]
- Alignment with Green Chemistry: MAOS aligns perfectly with the principles of green chemistry by reducing reaction times, energy consumption, and often enabling the use of less hazardous or even no solvents.[9][10]

This guide provides an in-depth look at the principles, protocols, and best practices for the microwave-assisted synthesis of benzimidazole derivatives, tailored for researchers in organic synthesis and drug discovery.

Principles of Microwave-Assisted Synthesis

Microwave-assisted synthesis relies on the ability of a material to convert electromagnetic energy into heat. This heating occurs through two primary mechanisms: dipolar polarization and ionic conduction.[8]

- Dipolar Polarization: Polar molecules, like many organic solvents and reagents, possess a dipole moment. When subjected to the high-frequency oscillating electric field of microwaves, these molecules attempt to align with the field. The rapid reorientation and resulting intermolecular friction generate heat efficiently and uniformly throughout the reaction mixture.
- Ionic Conduction: If ions are present in the reaction mixture (e.g., from a salt or catalyst), they will move through the solution under the influence of the electric field, creating an electric current. Resistance to this flow results in heat generation.

This direct "in-core" heating is fundamentally different from conventional heating, where heat is transferred slowly from an external source through the vessel walls.[9] This rapid, volumetric heating is the key to accelerating reaction rates and improving process control.

General Reaction Mechanism

© 2026 BenchChem. All rights reserved.

The most common route to 2-substituted benzimidazoles is the condensation of an o-phenylenediamine (OPD) with a carbonyl-containing compound, such as a carboxylic acid or an aldehyde.[11] The general mechanism proceeds as follows:

- Nucleophilic Attack: One of the amino groups of the OPD performs a nucleophilic attack on the electrophilic carbonyl carbon.
- Intermediate Formation: This attack leads to the formation of a tetrahedral intermediate, which then eliminates a molecule of water to form a Schiff base (imine) intermediate.
- Intramolecular Cyclization: The second amino group of the OPD attacks the imine carbon in an intramolecular fashion, forming the five-membered imidazole ring.
- Aromatization: The final step involves the elimination of another molecule (e.g., water or hydrogen) to achieve the stable, aromatic benzimidazole ring system.

Acid or Lewis acid catalysts are often employed to activate the carbonyl group, making it more electrophilic and accelerating the initial nucleophilic attack.

Caption: Generalized mechanism for benzimidazole synthesis.

Experimental Protocols

Safety is paramount. All procedures should be conducted in a well-ventilated fume hood. Microwave synthesis must be performed in a dedicated microwave reactor using appropriate sealed vessels designed to withstand high pressures and temperatures.

Protocol 1: Synthesis from o-Phenylenediamine and Carboxylic Acids

This method is a robust and straightforward approach for preparing a wide range of 2-substituted benzimidazoles.[6]

Rationale: This one-pot reaction leverages the high temperatures achievable with microwave heating to drive the condensation and dehydration steps without the need for harsh dehydrating agents. A strong mineral acid like HCl acts as a catalyst.[6]

© 2026 BenchChem. All rights reserved.

Materials:

- o-Phenylenediamine (OPD)
- Appropriate carboxylic acid (e.g., acetic acid, benzoic acid)
- 4 M Hydrochloric acid (HCl)
- Ethanol
- Water
- Microwave reactor (e.g., Samsung microwave oven with 900W output)[6]
- 25 mL glass beaker or microwave-safe vial

Step-by-Step Procedure:[6]

- In a 25 mL glass beaker, combine o-phenylenediamine (1.0 mmol) and the desired carboxylic acid (1.0 mmol).
- Thoroughly mix the solids using a spatula or by grinding in a mortar and pestle.
- Add two drops of 4 M hydrochloric acid to the mixture.
- Place the beaker in the center of the microwave oven.
- Irradiate the mixture at a medium power level (e.g., 50% power). The reaction time will vary depending on the carboxylic acid used, typically ranging from 1.5 to 4 minutes.
- Monitor the reaction progress by Thin Layer Chromatography (TLC).
- After completion, allow the mixture to cool to room temperature.
- Recrystallize the crude product from an ethanol/water (50:50) mixture to yield the pure benzimidazole derivative.

Expected Outcomes: This method typically produces high yields, often in the range of 80-95%. [6]

© 2026 BenchChem. All rights reserved.

Reactant (Carboxylic Acid)	Microwave Time (min)	Conventional Time (hr)	Yield (Microwave)
Acetic Acid	4.0	10	90%
Phenylacetic Acid	2.0	6	95%
Benzoic Acid	1.5	4	92%
Adipic Acid	2.5	8	85%

(Data adapted from Mobinikhaledi et al.)[6]

Protocol 2: Solvent-Free Synthesis from N-Substituted OPD and Aldehydes

This protocol is an excellent example of a green chemistry approach, as it eliminates the need for a solvent and uses a mild Lewis acid catalyst.[12]

Rationale: Erbium(III) triflate ($Er(OTf)_3$) is a highly efficient and water-tolerant Lewis acid catalyst that activates the aldehyde carbonyl for nucleophilic attack. The solvent-free condition maximizes reactant concentration and energy absorption, leading to extremely fast and clean reactions.[12]

Materials:

- N-phenyl-o-phenylenediamine
- Substituted aldehyde (e.g., benzaldehyde, p-tolualdehyde)
- Erbium(III) triflate ($Er(OTf)_3$)
- Ethyl acetate
- Deionized water
- Sodium sulfate (Na_2SO_4)

© 2026 BenchChem. All rights reserved.

- Dedicated microwave reactor (e.g., Anton Paar Synthos 3000)
- 3 mL microwave reaction vial

Step-by-Step Procedure:[12]

- To a 3 mL microwave vial, add N-phenyl-o-phenylenediamine (1.0 mmol), the desired aldehyde (1.0 mmol), and $Er(OTf)_3$ (1 mol%).
- Seal the vial and place it in the microwave reactor.
- Set the reaction temperature to 60 °C (using an IR sensor to monitor) and irradiate for 5-10 minutes.
- Monitor the reaction by TLC or GC/MS until the starting diamine is consumed.
- After cooling, add deionized water to the reaction mixture to dissolve the catalyst.
- Extract the organic product with ethyl acetate (4 x 3 mL).
- Combine the organic phases and dry over anhydrous sodium sulfate (Na_2SO_4).
- Evaporate the solvent under reduced pressure to isolate the pure 1,2-disubstituted benzimidazole product.

Expected Outcomes: This green and efficient method provides excellent yields, typically between 86-99%, in very short reaction times.[12] The microwave-assisted procedure reduces reaction time from 60 minutes (conventional) to just 5 minutes, while increasing the yield from ~61% to >99% for the synthesis of 1-phenyl-2-phenylbenzimidazole.[12]

Workflow and Characterization

A successful synthesis requires a systematic workflow from setup to final product verification.

© 2026 BenchChem. All rights reserved.

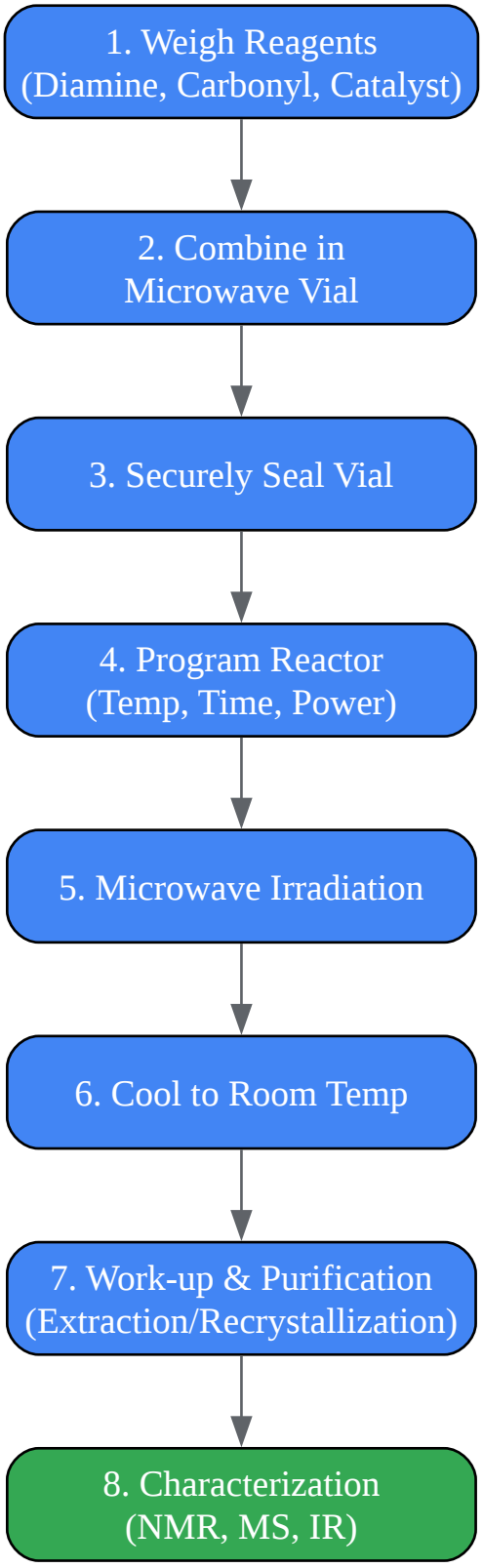

Click to download full resolution via product page

Caption: Standard workflow for microwave-assisted synthesis.

© 2026 BenchChem. All rights reserved.

Self-Validation and Characterization: To ensure the trustworthiness of the protocol, the identity and purity of the synthesized benzimidazole derivatives must be confirmed.

- Thin Layer Chromatography (TLC): Essential for monitoring reaction progress. A successful reaction will show the disappearance of starting material spots and the appearance of a new product spot with a different Rf value.
- Spectroscopic Analysis:
  - ^{1}H and ^{13}C NMR: Provides definitive structural information about the arrangement of protons and carbons in the molecule, confirming the formation of the benzimidazole core and the nature of its substituents.
  - Mass Spectrometry (MS): Confirms the molecular weight of the product.
  - Infrared (IR) Spectroscopy: Can confirm the disappearance of starting material functional groups (e.g., C=O stretch of an aldehyde, N-H stretches of the diamine) and the appearance of new bands characteristic of the product.

Troubleshooting and Safety Considerations

© 2026 BenchChem. All rights reserved.

Issue	Potential Cause	Suggested Solution
Low or No Yield	Insufficient microwave power or time.	Gradually increase irradiation time or power setting. Ensure the temperature is reaching the target.
	Ineffective catalyst.	Check the quality of the catalyst. For acid-catalyzed reactions, ensure sufficient acid is present.
	Poor microwave absorption.	If using a non-polar solvent, consider adding a small amount of a polar co-solvent (e.g., ethanol) or a silicon carbide (SiC) passive heating element to improve energy absorption.
Byproduct Formation	Reaction temperature is too high.	Reduce the target temperature or microwave power.
	Reaction time is too long.	Optimize the reaction time by monitoring with TLC at shorter intervals.
Vial Pressure Error	Overfilling the reaction vial.	Do not exceed the recommended fill volume for the microwave vial (typically ~1/3 full).
	Formation of gaseous byproducts.	Reduce the amount of starting material or use a larger reaction vessel.

Safety:

- Pressure: Microwave heating of sealed vessels can generate significant pressure. Never exceed the pressure rating of the vessel.

© 2026 BenchChem. All rights reserved.

- Solvent Choice: Use solvents with a high enough boiling point for the target reaction temperature. Low-boiling solvents can create excessive pressure.
- Personal Protective Equipment (PPE): Always wear safety glasses, a lab coat, and appropriate gloves.
- Equipment: Only use microwave reactors and vessels specifically designed for chemical synthesis. Domestic microwave ovens lack the necessary safety features for pressure and temperature control.[6]

References

- Mobinikhaledi, A., Foroughi, A., Kalhor, M., & Shariatzadeh, M. (2010). Microwave-assisted Synthesis of Some Benzimidazole Derivatives: A Case for a Comparative Study. Asian Journal of Chemistry, 22(2), 1301-1306.
- Bonanno, F., et al. (2021). The Highly Efficient Synthesis of 1,2-Disubstituted Benzimidazoles Using Microwave Irradiation. Molecules, 26(11), 3290.
- Lim, H. J., et al. (2010). Microwave-Assisted Synthesis of Benzimidazoles, Benzoxazoles, and Benzothiazoles from Resin-Bound Esters. ACS Combinatorial Science, 12(5), 483-487.
- Özil, M., & Parlak, C. (2017). PART I: MICROWAVE-ASSISTED SYNTHESIS OF BENZIMIDAZOLES: AN OVERVIEW (UNTIL 2013). Journal of the Turkish Chemical Society, Section A: Chemistry, 4(1), 1-22.
- Chawla, A., et al. (2011). Importance of Microwave Reactions in the Synthesis of Novel Benzimidazole Derivatives A Review. Journal of Chemical and Pharmaceutical Research, 3(6), 925-944.
- Anonymous. (2021). WORLD JOURNAL OF PHARMACEUTICAL RESEARCH. WJPR.
- Anonymous. (n.d.). Green Synthesis of Benzimidazole Derivatives. International Journal of Research in Engineering and Science (IJRES).
- Al-Ostath, A. I., et al. (2023). Unlocking the Pharmacological Potential of Benzimidazole Derivatives: A Pathway to Drug Development. Molecules, 28(19), 6777.

© 2026 BenchChem. All rights reserved.

- Verma, R. S. (2019). Importance of Microwave Heating in Organic Synthesis. Advanced Journal of Chemistry, Section A, 2(2), 94-104.
- Sahu, J. K., et al. (2023). Benzimidazole Derivatives: A Review of Advances in Synthesis, Biological Potential, Computational Modelling, and Specialized Material Functions. Molecules, 28(18), 6667.
- Sharma, D., & Narasimhan, B. (2020). A Review on the Green Synthesis of Benzimidazole Derivatives and Their Pharmacological Activities. Molecules, 25(17), 3929.
- Taylor, R. D., et al. (2020). Benefits and applications of microwave-assisted synthesis of nitrogen containing heterocycles in medicinal chemistry. Future Medicinal Chemistry, 12(7), 655-673.
- Anonymous. (n.d.). Microwaves in Organic Synthetic Chemistry- A Greener Approach to Environmental Protection: An Overview. International Journal of Research in Engineering and Science (IJRES).
- Shukla, S., et al. (2025). Green Synthesis of Benzimidazole Derivatives: A Sustainable Approach Towards Potent Antimicrobial Agents. Journal of Chemical Health Risks.
- Anonymous. (2024). Benzimidazole Derivatives in Drug Design: Structure-Activity Relationships and Therapeutic Potential: A Review. ResearchGate.
- Anonymous. (2024). Microwave-Assisted Organic Synthesis: A Green Chemistry Strategy. International Journal of Research in Pharmacy and Allied Science.
- Wang, D. Z., et al. (2020). Recent achievements in the synthesis of benzimidazole derivatives. RSC Advances, 10(42), 24913-24933.
- Anonymous. (2022). Green synthesis of benzimidazole derivatives by using zinc boron nitride catalyst and their application from DFT (B3LYP) study. Scientific Reports, 12(1), 10842.
- Anonymous. (2023). Benzimidazole Derivatives in Anticancer Therapy: A Comprehensive Review. ResearchGate.

© 2026 BenchChem. All rights reserved.

- Priecel, P., et al. (2017). Advantages and Limitations of Microwave Reactors: From Chemical Synthesis to the Catalytic Valorization of Biobased Chemicals. ACS Sustainable Chemistry & Engineering, 5(1), 41-58.
- Anonymous. (2024). Eco-Friendly Synthesis of Benzimidazole Derivatives: Advances in Green Chemistry and Applications. International Journal of Advanced Research in Science, Communication and Technology.

Need Custom Synthesis?

BenchChem offers custom synthesis for rare earth carbides and specific isotopiclabeling.

Email: info@benchchem.com or Request Quote Online.

Sources

- 1. Unlocking the Pharmacological Potential of Benzimidazole Derivatives: A Pathway to Drug Development - PubMed [pubmed.ncbi.nlm.nih.gov]
- 2. mdpi.com [mdpi.com]
- 3. researchgate.net [researchgate.net]
- 4. ijarsct.co.in [ijarsct.co.in]
- 5. Benefits and applications of microwave-assisted synthesis of nitrogen containing heterocycles in medicinal chemistry - PMC [pmc.ncbi.nlm.nih.gov]
- 6. asianpubs.org [asianpubs.org]
- 7. jocpr.com [jocpr.com]
- 8. ijrpas.com [ijrpas.com]
- 9. ajchem-a.com [ajchem-a.com]
- 10. Microwaves in Organic Synthetic Chemistry- A Greener Approach to Environmental Protection: An Overview [ajgreenchem.com]
- 11. sphinxsai.com [sphinxsai.com]
- 12. mdpi.com [mdpi.com]
- To cite this document: BenchChem. [Application Note & Protocols: Microwave-Assisted Synthesis of Benzimidazole Derivatives]. BenchChem, [2026]. [Online PDF]. Available at:

© 2026 BenchChem. All rights reserved.

[https://www.benchchem.com/product/b1303733/docs#application-note-protocols-microwave-assisted-synthesis-of-benzimidazole-derivatives]

Disclaimer & Data Validity:

The information provided in this document is for Research Use Only (RUO) and is strictly not intended for diagnostic or therapeutic procedures. While BenchChem strives to provide accurate protocols, we make no warranties, express or implied, regarding the fitness of this product for every specific experimental setup.

Technical Support: The protocols provided are for reference purposes. Unsure if this reagent suits your experiment?

Need Industrial/Bulk Grade? Request Custom Synthesis Quote

BenchChem

Our mission is to be the trusted global source of essential and advanced chemicals, empowering scientists and researchers to drive progress in science and industry.

Contact

Address: 3281 E Guasti Rd

Ontario, CA 91761, United States

Phone: (601) 213-4426

Email: info@benchchem.com

Contact our Ph.D. Support Team for a compatibility check