Spectroscopic Characterization of 3-Chloro-5-fluorothiophenol: A Technical Guide

Author: BenchChem Technical Support Team. **Date**: December 2025

Compound of Interest		
Compound Name:	*3-Chloro-5-fluorothiophenol*	
Cat. No.:	*B1302654*	*Get Quote*

For Researchers, Scientists, and Drug Development Professionals

This technical guide provides a comprehensive overview of the spectroscopic properties of **3-Chloro-5-fluorothiophenol**. Due to the limited availability of direct experimental spectra for this specific compound in public databases, this guide presents predicted data based on established spectroscopic principles and data from analogous substituted thiophenols. Detailed, generalized experimental protocols for acquiring Nuclear Magnetic Resonance (NMR), Infrared (IR), and Mass Spectrometry (MS) data are also provided to aid researchers in their analytical workflows.

Predicted Spectroscopic Data

The following tables summarize the predicted spectroscopic data for **3-Chloro-5-fluorothiophenol**. These predictions are derived from the analysis of structurally similar compounds and theoretical models.

Nuclear Magnetic Resonance (NMR) Spectroscopy

Table 1: Predicted ^{1}H NMR Data for **3-Chloro-5-fluorothiophenol**

© 2025 BenchChem. All rights reserved.

Chemical Shift (δ, ppm)	Multiplicity	Coupling Constant (J, Hz)	Assignment
~ 3.5 - 4.0	Singlet (broad)	-	Thiol (-SH)
~ 7.0 - 7.2	Triplet of doublets	J(H-F) ≈ 8-10, J(H-H) ≈ 2-3	H-6
~ 6.8 - 7.0	Doublet of doublets	J(H-H) ≈ 2-3, J(H-F) ≈ 1-2	H-2
~ 6.7 - 6.9	Doublet of triplets	J(H-F) ≈ 8-10, J(H-H) ≈ 2-3	H-4

Note: Predicted chemical shifts are relative to tetramethylsilane (TMS) in a typical deuterated solvent like $CDCl_3$. The broadness of the thiol proton signal is due to chemical exchange.

Table 2: Predicted ^{13}C NMR Data for **3-Chloro-5-fluorothiophenol**

Chemical Shift (δ, ppm)	Assignment
~ 162 - 165 (d, J(C-F) ≈ 245-255 Hz)	C-5
~ 134 - 137 (d, J(C-F) ≈ 8-10 Hz)	C-3
~ 130 - 133 (d, J(C-F) ≈ 3-5 Hz)	C-1
~ 115 - 118 (d, J(C-F) ≈ 20-25 Hz)	C-4
~ 112 - 115 (d, J(C-F) ≈ 20-25 Hz)	C-6
~ 110 - 113 (d, J(C-F) ≈ 3-5 Hz)	C-2

Note: Predicted chemical shifts are relative to TMS. The carbon attached to fluorine (C-5) will exhibit a large one-bond coupling constant (^1JCF), while other carbons will show smaller two- or three-bond couplings (^2JCF, ^3JCF).

Infrared (IR) Spectroscopy

Table 3: Predicted IR Absorption Bands for **3-Chloro-5-fluorothiophenol**

© 2025 BenchChem. All rights reserved.

Wavenumber (cm^{-1})	Intensity	Assignment
~ 3100 - 3000	Medium	Aromatic C-H stretch
~ 2600 - 2550	Weak	S-H stretch
~ 1600 - 1570	Medium-Strong	Aromatic C=C stretch
~ 1470 - 1440	Medium-Strong	Aromatic C=C stretch
~ 1250 - 1200	Strong	C-F stretch
~ 880 - 840	Strong	C-H out-of-plane bend (isolated H)
~ 800 - 750	Strong	C-Cl stretch

Mass Spectrometry (MS)

Table 4: Predicted Mass Spectrometry Data for **3-Chloro-5-fluorothiophenol**

m/z	Relative Intensity	Assignment
162/164	High	Molecular ion $[M]^+$ (with ^{35}Cl/^{37}Cl isotope pattern)
161/163	Moderate	$[M-H]^+$
129	Moderate	$[M-SH]^+$
99	Moderate	$[M-Cl-S]^+$
96	Moderate	$[C_6H_4F]^+$

Note: The molecular ion will exhibit a characteristic 3:1 intensity ratio for the M and M+2 peaks due to the presence of the chlorine-35 and chlorine-37 isotopes.

Experimental Protocols

The following are generalized protocols for the spectroscopic analysis of a liquid sample like **3-Chloro-5-fluorothiophenol**.

© 2025 BenchChem. All rights reserved.

Nuclear Magnetic Resonance (NMR) Spectroscopy

Objective: To obtain ^{1}H and ^{13}C NMR spectra for structural elucidation.

Materials:

- **3-Chloro-5-fluorothiophenol** sample (5-20 mg)
- Deuterated solvent (e.g., $CDCl_3$, Acetone-d_6)
- Tetramethylsilane (TMS) as an internal standard (if not already in the solvent)
- 5 mm NMR tubes
- Pipettes

Procedure:

- Sample Preparation: Dissolve approximately 5-20 mg of **3-Chloro-5-fluorothiophenol** in 0.5-0.7 mL of a deuterated solvent in a clean, dry vial. Add a small amount of TMS if the solvent does not already contain it.
- Transfer to NMR Tube: Using a pipette, transfer the solution into a 5 mm NMR tube to a height of about 4-5 cm.
- Instrument Setup: Place the NMR tube in the spectrometer's spinner and insert it into the magnet.
- Shimming: Perform automated or manual shimming to optimize the magnetic field homogeneity.
- ^{1}H NMR Acquisition:
    - Set the spectrometer to the appropriate frequency for protons.
    - Acquire the spectrum using standard parameters (e.g., 16-32 scans, 1-2 second relaxation delay).

© 2025 BenchChem. All rights reserved.

  - Process the data by applying a Fourier transform, phase correction, and baseline correction.
  - Reference the spectrum to the TMS signal at 0 ppm.
  - Integrate the signals and measure the coupling constants.
- ^{13}C NMR Acquisition:
  - Set the spectrometer to the appropriate frequency for carbon-13.
  - Acquire the spectrum using a proton-decoupled pulse sequence.
  - A larger number of scans (e.g., 1024 or more) and a longer relaxation delay may be necessary due to the low natural abundance of ^{13}C.
  - Process and reference the spectrum similarly to the ^{1}H spectrum.

Infrared (IR) Spectroscopy

Objective: To identify the functional groups present in the molecule.

Materials:

- **3-Chloro-5-fluorothiophenol** sample (1-2 drops)
- FTIR spectrometer with a liquid sample holder (e.g., salt plates (NaCl or KBr) or an ATR accessory)
- Volatile solvent for cleaning (e.g., acetone, isopropanol)
- Lens paper

Procedure (using Salt Plates):

- Plate Preparation: Ensure the salt plates are clean and dry. If necessary, polish them with a small amount of a non-polar solvent on a lens paper.

© 2025 BenchChem. All rights reserved.

- Sample Application: Place one to two drops of the liquid **3-Chloro-5-fluorothiophenol** onto the center of one salt plate.
- Assembly: Carefully place the second salt plate on top of the first, spreading the liquid into a thin film.
- Spectrum Acquisition:
  - Place the assembled salt plates into the spectrometer's sample holder.
  - Acquire a background spectrum of the empty beam path.
  - Acquire the sample spectrum over the desired range (e.g., 4000-400 cm^{-1}).
  - The instrument software will automatically ratio the sample spectrum to the background spectrum to produce the final absorbance or transmittance spectrum.
- Cleaning: After analysis, carefully separate the salt plates and clean them with a volatile solvent. Store the plates in a desiccator.

Mass Spectrometry (MS)

Objective: To determine the molecular weight and fragmentation pattern of the molecule.

Materials:

- **3-Chloro-5-fluorothiophenol** sample
- Volatile solvent (e.g., methanol, acetonitrile)
- Mass spectrometer with an appropriate ionization source (e.g., Electron Ionization - EI)

Procedure (using Electron Ionization - EI):

- Sample Preparation: Prepare a dilute solution of the sample in a volatile solvent.
- Introduction into the Mass Spectrometer: Introduce the sample into the ion source. For a volatile liquid, this can be done via direct injection or through a gas chromatograph (GC-MS).

© 2025 BenchChem. All rights reserved.

- Ionization: In the ion source, the sample molecules are bombarded with a high-energy electron beam (typically 70 eV). This causes the molecules to ionize and fragment.
- Mass Analysis: The resulting ions are accelerated and separated based on their mass-to-charge ratio (m/z) by the mass analyzer (e.g., quadrupole, time-of-flight).
- Detection: The separated ions are detected, and a mass spectrum is generated, plotting ion intensity versus m/z.
- Data Analysis: Identify the molecular ion peak and analyze the fragmentation pattern to deduce the structure of the molecule. Pay attention to the isotopic pattern of chlorine.

Visualizations

The following diagrams illustrate the logical workflow for the spectroscopic analysis of **3-Chloro-5-fluorothiophenol**.

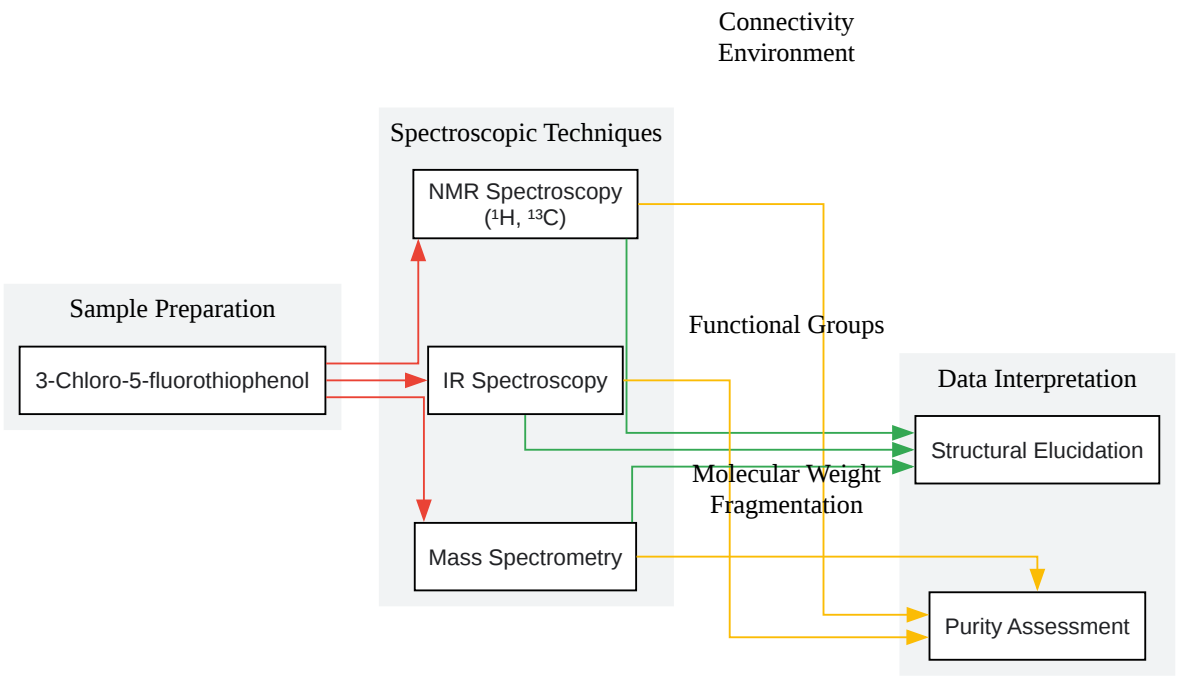

© 2025 BenchChem. All rights reserved.

Click to download full resolution via product page

Caption: Workflow for the spectroscopic analysis of **3-Chloro-5-fluorothiophenol**.

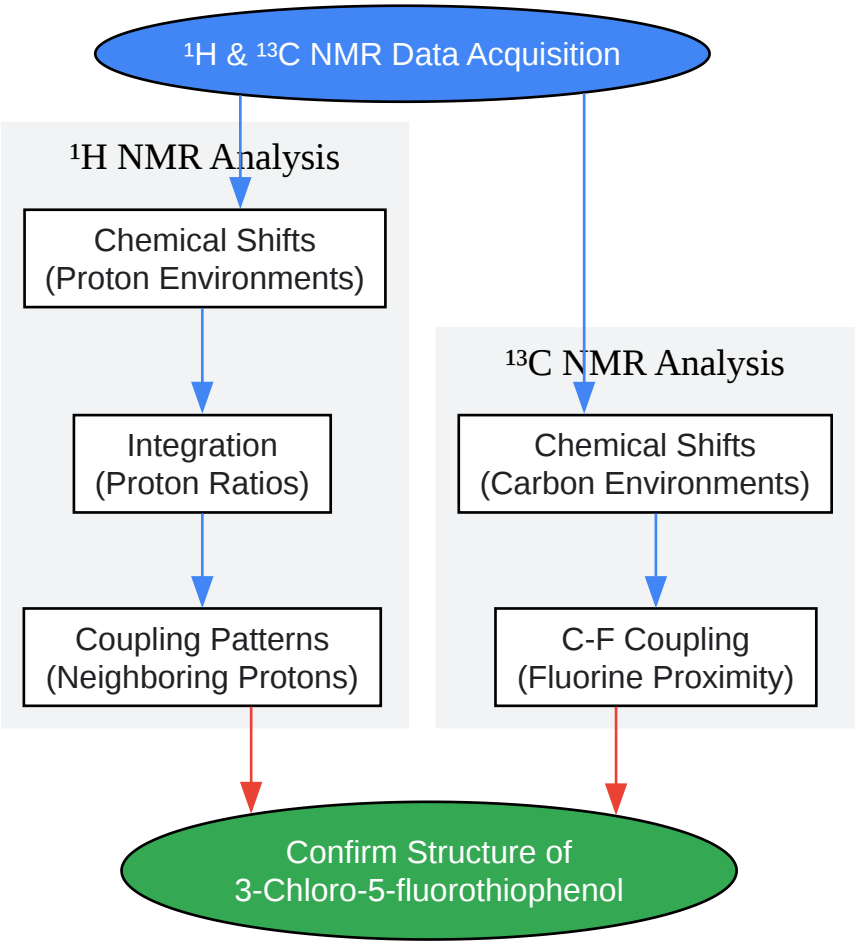

Click to download full resolution via product page

Caption: Logical flow for NMR data interpretation.

- To cite this document: BenchChem. [Spectroscopic Characterization of 3-Chloro-5-fluorothiophenol: A Technical Guide]. BenchChem, [2025]. [Online PDF]. Available at: [https://www.benchchem.com/product/b1302654#spectroscopic-data-for-3-chloro-5-fluorothiophenol-nmr-ir-ms]

Disclaimer & Data Validity:

The information provided in this document is for Research Use Only (RUO) and is strictly not intended for diagnostic or therapeutic procedures. While BenchChem strives to provide

© 2025 BenchChem. All rights reserved.

accurate protocols, we make no warranties, express or implied, regarding the fitness of this product for every specific experimental setup.

Technical Support: The protocols provided are for reference purposes. Unsure if this reagent suits your experiment? [Contact our Ph.D. Support Team for a compatibility check]

Need Industrial/Bulk Grade? Request Custom Synthesis Quote

BenchChem

Our mission is to be the trusted global source of essential and advanced chemicals, empowering scientists and researchers to drive progress in science and industry.

Contact

Address: 3281 E Guasti Rd

Ontario, CA 91761, United States

Phone: (601) 213-4426

Email: info@benchchem.com

© 2025 BenchChem. All rights reserved.