Technical Support Center: Synthesis of Dimethyl (2-hydroxyethyl)phosphonate

Author: BenchChem Technical Support Team. **Date**: May 2026

Compound of Interest

Compound Name:	*Dimethyl (2-hydroxyethyl)phosphonate*
CAS No.:	*54731-72-5*
Cat. No.:	*B1301941*

Get Quote

Introduction

Dimethyl (2-hydroxyethyl)phosphonate is a valuable intermediate in the synthesis of various organophosphorus compounds, including flame retardants and biologically active molecules. Its synthesis is most commonly achieved via a base-catalyzed addition of dimethyl phosphite to ethylene oxide, a variant of the Pudovik reaction.[1] While seemingly straightforward, this reaction is frequently plagued by side reactions that can significantly reduce yield and complicate purification.

This guide serves as a dedicated technical support resource for researchers and drug development professionals. It is structured to provide not just procedural steps, but a deep, mechanistic understanding of the challenges encountered during this synthesis. We will explore the causality behind common experimental failures and offer field-proven, robust solutions to ensure a successful and reproducible outcome.

Section 1: The Ideal Reaction Pathway

© 2026 BenchChem. All rights reserved.

The desired transformation involves the nucleophilic addition of the phosphite P-H bond across the C-O bond of the ethylene oxide ring. The reaction is typically initiated by a base, which deprotonates the dimethyl phosphite to generate a highly nucleophilic phosphorus anion. This anion then attacks one of the electrophilic carbons of the ethylene oxide ring, leading to ring-opening and formation of an alkoxide intermediate. A subsequent proton transfer, typically from the conjugate acid of the base or another phosphite molecule, yields the final **Dimethyl (2-hydroxyethyl)phosphonate** product.

© 2026 BenchChem. All rights reserved.

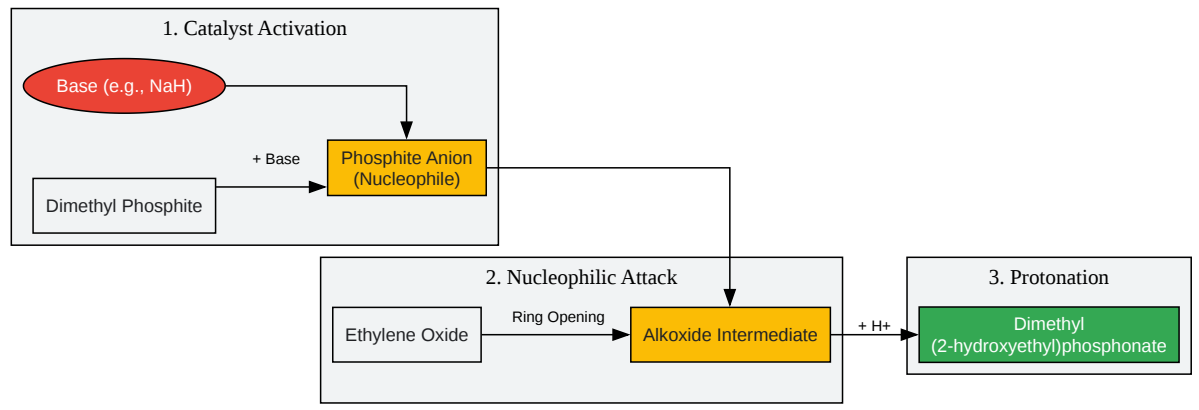

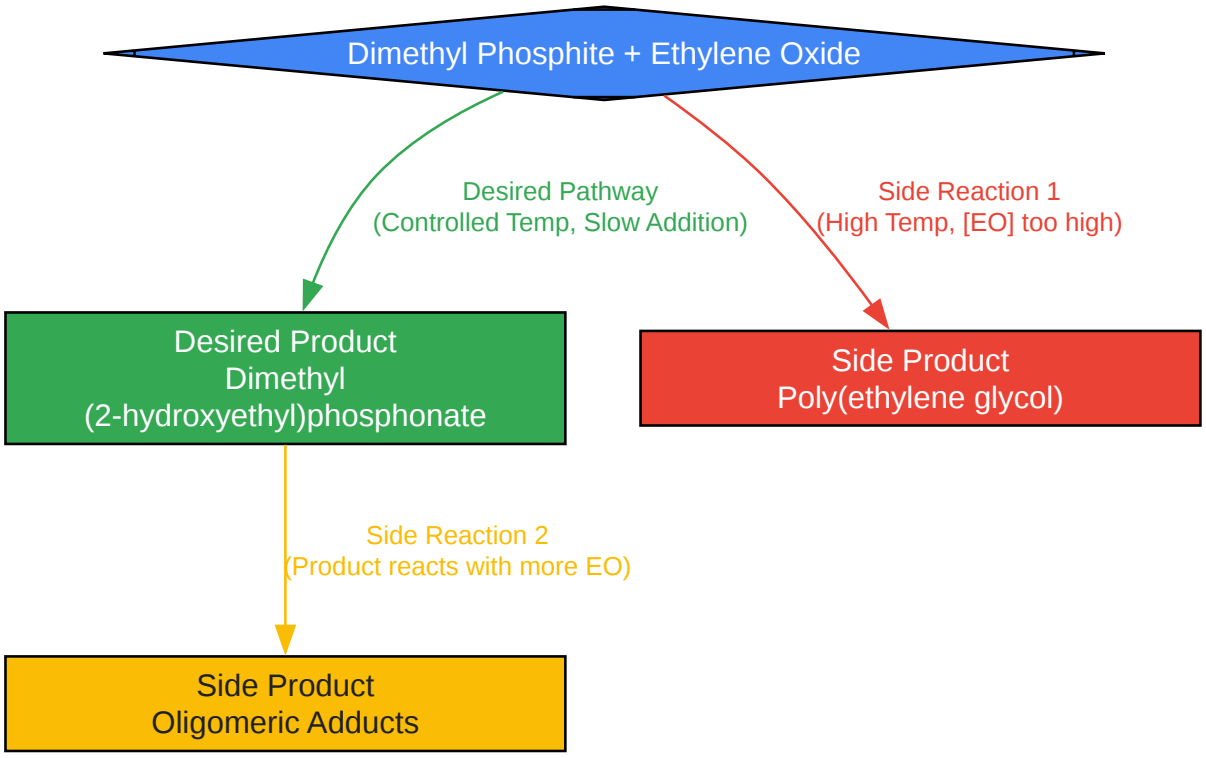

Click to download full resolution via product page

Caption: Competing reaction pathways in the synthesis of **Dimethyl (2-hydroxyethyl)phosphonate**.

© 2026 BenchChem. All rights reserved.

Q3: My product seems to be decomposing during vacuum distillation, resulting in a low yield and a darkened, tarry residue.

A3: Probable Cause: Thermal Instability of the Product.

α-Hydroxyphosphonates and related structures can be thermally labile. Standard vacuum distillation often requires temperatures that are high enough to cause decomposition, which may include retro-Pudovik reactions, elimination, or transesterification-related degradation.

- Causality: The combination of high temperature and extended residence time in a hot distillation flask promotes degradation pathways. The hydroxyl group can interact with the phosphonate moiety, especially if any acidic or basic residues remain.
- Solutions & Prophylactic Measures:
  - High-Vacuum Distillation: Use a high-vacuum pump (<0.1 mmHg) to lower the boiling point of the product as much as possible.
  - Specialized Distillation Apparatus: Avoid standard distillation. A Kugelrohr apparatus is highly recommended as it minimizes the residence time at high temperatures. [2]For larger scales, a wiped-film molecular still is the industrial standard and provides the best results by creating a thin film of material on a heated surface for a very short duration. [2] 3. Chromatographic Purification: If distillation is problematic, purification via column chromatography on silica gel is a viable alternative, though it may be less practical for very large quantities.

Section 3: Frequently Asked Questions (FAQs)

- What is the optimal catalyst and how much should I use?
  - For laboratory scale, sodium hydride (NaH) is an excellent choice as it is a strong, non-nucleophilic base that deprotonates the phosphite irreversibly. Use a catalytic amount, typically 5-10 mol%. Anhydrous potassium carbonate (K_2CO_3) is a safer, albeit slower, alternative. [3]
- How critical is the purity of my starting materials?

© 2026 BenchChem. All rights reserved.

- Extremely critical. Dimethyl phosphite can hydrolyze to monomethyl phosphonate and eventually phosphorous acid. [4]Water is a nucleophile that can open the ethylene oxide ring, forming ethylene glycol, which will then compete in side reactions. Ensure you use anhydrous solvents and freshly distilled or high-purity reagents.

- What are the best safety practices for handling ethylene oxide?
  - Ethylene oxide is a toxic, flammable, and carcinogenic gas. All manipulations must be performed in a certified chemical fume hood. It is typically supplied as a liquid in a lecture bottle or cylinder; use appropriate regulators and tubing. Ensure there are no ignition sources nearby. Always work with a colleague present and have an emergency plan in place.

- What is the recommended workup procedure?
  - After the reaction is complete, cool the mixture and cautiously quench the catalyst. If NaH was used, this can be done by the slow addition of a proton source like isopropanol or saturated aqueous ammonium chloride. Afterward, perform an aqueous workup to remove salts, dry the organic layer thoroughly (e.g., with $MgSO_4$ or Na_2SO_4), and remove the solvent under reduced pressure before purification.

Section 4: Optimized Experimental Protocol

This protocol is a self-validating system designed to minimize the side reactions discussed above. Adherence to temperature and addition rates is critical for success.

Reagents & Equipment:

- Dimethyl phosphite (high purity, distilled)
- Sodium hydride (60% dispersion in mineral oil)
- Ethylene oxide (lecture bottle)
- Anhydrous tetrahydrofuran (THF)
- Three-neck round-bottom flask equipped with a magnetic stirrer, thermocouple, dry gas inlet (N_2 or Ar), and a gas dispersion tube.

© 2026 BenchChem. All rights reserved.

- Ice-salt bath or cryocooler.
- Syringe pump (optional, for controlled liquid addition).

Procedure:

- Setup: Assemble the flame-dried three-neck flask under an inert atmosphere of nitrogen. Add anhydrous THF (approx. 5 mL per 1 g of dimethyl phosphite).
- Catalyst Addition: To the stirred THF, add sodium hydride (0.05 eq). Caution: NaH reacts violently with water.
- Phosphite Addition: Slowly add dimethyl phosphite (1.1 eq) to the NaH suspension in THF. You should observe gas evolution (H_2). Allow the mixture to stir until the gas evolution ceases.
- Cooling: Cool the reaction flask to 0 °C using an ice-salt bath. Ensure the internal temperature is stable.
- Ethylene Oxide Addition: This is the most critical step. Bubble ethylene oxide gas (1.0 eq) through the gas dispersion tube into the reaction mixture at a very slow rate, ensuring the internal temperature does not exceed 5-10 °C. Alternatively, condense the required amount of ethylene oxide into a cooled, graduated vessel and add it dropwise via a cannula. The addition should take place over 2-4 hours.
- Reaction Monitoring: After the addition is complete, allow the reaction to stir at 0-5 °C for an additional 2-3 hours. Monitor the reaction progress by taking small aliquots for ^{31}P NMR analysis until the dimethyl phosphite starting material peak ($\delta \approx 7$-10 ppm, $J(P,H) \approx 700$ Hz) is consumed.
- Quenching: Slowly and carefully add 2-3 mL of isopropanol to the cold reaction mixture to quench any remaining NaH. Then, add saturated aqueous NH_4Cl solution.
- Workup: Transfer the mixture to a separatory funnel, extract with ethyl acetate or dichloromethane (3x). Combine the organic layers, wash with brine, dry over anhydrous $MgSO_4$, filter, and concentrate under reduced pressure.

© 2026 BenchChem. All rights reserved.

- Purification: Purify the resulting crude oil by Kugelrohr distillation under high vacuum to obtain **Dimethyl (2-hydroxyethyl)phosphonate** as a colorless liquid.

Section 5: Data Summary Table

Parameter	Recommended Value / Observation	Rationale
Reactant Ratio	1.1 - 1.2 eq. Dimethyl Phosphite / 1.0 eq. Ethylene Oxide	Excess phosphite suppresses oligomerization of the product.
Catalyst	5-10 mol% Sodium Hydride (NaH)	Strong, non-nucleophilic base ensures efficient phosphite anion formation.
Temperature	0 °C to 10 °C	Minimizes ethylene oxide polymerization and other exothermic side reactions.
Addition Time	2 - 4 hours	Maintains low instantaneous [EO], favoring the desired reaction pathway.
Expected Yield	75-90% (post-purification)	Realistic yield when side reactions are properly controlled.
^{31}P NMR (Product)	Singlet at δ ≈ 30-32 ppm (in $CDCl_3$)	Confirms formation of the phosphonate ester.
^{1}H NMR (Product)	Characteristic multiplets for -P-CH_2- and -CH_2-OH	Confirms the (2-hydroxyethyl) structure.

Section 6: References

- Grokipedia. (2026). Pudovik reaction.
- Wikipedia. (n.d.). Pudovik reaction.

© 2026 BenchChem. All rights reserved.

- Taylor & Francis Online. (n.d.). Synthesis of Dialkyl-Hydroxymethylphosphonates in Heterogeneous Conditions. Phosphorus, Sulfur, and Silicon and the Related Elements, 177(5).
- Taylor & Francis Online. (n.d.). ON THE SIDE REACTIONS ACCOMPANYING THE TRANS-ESTERIFICATION OF THE ACID DIESTERS OF PHOSPHOROUS ACID. Phosphorous and Sulfur and the Related Elements.
- OECD SIDS. (2002). DIMETHYL PHOSPHONATE CAS N°: 868-85-9.
- Organic Syntheses. (n.d.). diethyl [(2-tetrahydropyranyloxy)methyl]phosphonate.

Need Custom Synthesis?

BenchChem offers custom synthesis for rare earth carbides and specific isotopiclabeling.

Email: info@benchchem.com or Request Quote Online.

Sources

- 1. grokipedia.com [grokipedia.com]
- 2. Organic Syntheses Procedure [orgsyn.org]
- 3. tandfonline.com [tandfonline.com]
- 4. hpvchemicals.oecd.org [hpvchemicals.oecd.org]
- To cite this document: BenchChem. [Technical Support Center: Synthesis of Dimethyl (2-hydroxyethyl)phosphonate]. BenchChem, [2026]. [Online PDF]. Available at: [https://www.benchchem.com/product/b1301941/docs#technical-support-center-synthesis-of-dimethyl-2-hydroxyethyl-phosphonate]

Disclaimer & Data Validity:

The information provided in this document is for Research Use Only (RUO) and is strictly not intended for diagnostic or therapeutic procedures. While BenchChem strives to provide accurate protocols, we make no warranties, express or implied, regarding the fitness of this product for every specific experimental setup.

© 2026 BenchChem. All rights reserved.

Technical Support: The protocols provided are for reference purposes. Unsure if this reagent suits your experiment?

Need Industrial/Bulk Grade? Request Custom Synthesis Quote

BenchChem

Our mission is to be the trusted global source of essential and advanced chemicals, empowering scientists and researchers to drive progress in science and industry.

Contact

Address: 3281 E Guasti Rd

Ontario, CA 91761, United States

Phone: (601) 213-4426

Email: info@benchchem.com

Contact our Ph.D. Support Team for a compatibility check

© 2026 BenchChem. All rights reserved.