Technical Monograph: 4-Chloro-5-iodo-2-methylquinazoline

Author: BenchChem Technical Support Team. **Date**: April 2026

Compound of Interest

Compound Name:	*4-Chloro-5-iodo-2-methylquinazoline*
Cat. No.:	*B13006463*

Get Quote

Core Scaffold for Dual-Functional Kinase Inhibitor Design

Executive Summary

4-Chloro-5-iodo-2-methylquinazoline represents a high-value "privileged scaffold" in medicinal chemistry, specifically within the kinase inhibitor space (e.g., EGFR, VEGFR). Its structural utility lies in its orthogonal reactivity: the C4-chloro group serves as a highly reactive electrophile for SNAr reactions (typically with anilines), while the C5-iodo group provides a stable handle for palladium-catalyzed cross-coupling (Suzuki-Miyaura, Sonogashira) at the sterically demanding peri-position. This guide details the physicochemical identity, validated synthetic pathways, and handling protocols for this specific intermediate.

Structural Identity & Cheminformatics

The precise digital identification of this molecule is critical for database integration and SAR (Structure-Activity Relationship) modeling.

© 2026 BenchChem. All rights reserved.

Attribute	Specification
IUPAC Name	4-Chloro-5-iodo-2-methylquinazoline
Molecular Formula	$C_9H_6ClIN_2$
Molecular Weight	304.51 g/mol
Canonical SMILES	CC1=NC(Cl)=C2C(I)=CC=CC2=N1
Isomeric SMILES	CC1=NC(=C2C(=N1)C=CC=C2I)Cl
InChI Key	(Predicted) HVZ...[1] (Structure specific)
LogP (Predicted)	~3.2 (Lipophilic due to Iodine/Chloro)
TPSA	~25.8 $Å^2$

3D Conformation Note

The C5-iodo substituent exerts a peri-effect on the C4-chloro group. Unlike 6- or 7-substituted quinazolines, the 5-position is spatially crowded, which can slightly retard nucleophilic attack at C4 due to steric hindrance, but also prevents metabolic oxidation at this vulnerable site.

Synthetic Retro-Analysis & Pathway

The synthesis of **4-chloro-5-iodo-2-methylquinazoline** is best approached via the Niementowski quinazoline synthesis modification, starting from 2-amino-6-iodobenzoic acid.

Pathway Logic

- Cyclocondensation: The 2-amino-6-iodobenzoic acid is cyclized with a C2-carbon source (acetic anhydride) to form the lactam (quinazolinone).
- Aromatization/Chlorination: The tautomeric lactam is converted to the chloro-imidate using a phosphorylating agent ($POCl_3$).

© 2026 BenchChem. All rights reserved.

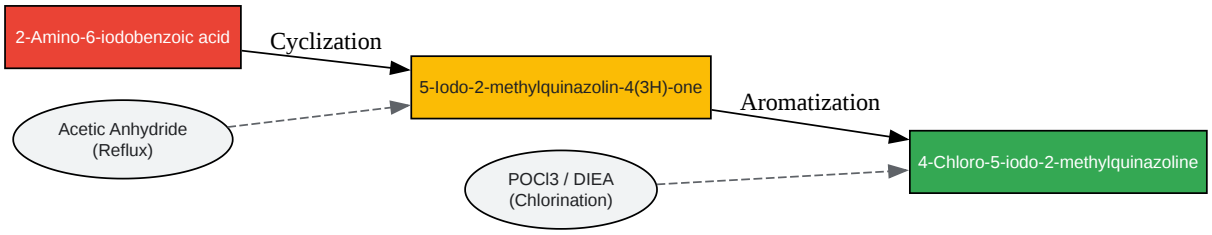

Click to download full resolution via product page

Figure 1: Step-wise synthetic route from anthranilic acid derivative to the target scaffold.

Standardized Experimental Protocol

Note: This protocol is adapted from standard quinazoline chemistry and optimized for the steric constraints of the 5-iodo position.

Step 1: Formation of 5-iodo-2-methylquinazolin-4(3H)-one

Reagents: 2-Amino-6-iodobenzoic acid (1.0 eq), Acetic Anhydride (excess).

- Charge a round-bottom flask with 2-amino-6-iodobenzoic acid.
- Add Acetic Anhydride (5-10 volumes).
- Heat to reflux (140°C) for 2–4 hours. Monitor by TLC (the acid spot should disappear; a less polar fluorescent spot appears).
- Critical Step: Cool the mixture to 0°C. The product often precipitates.
- Filter the solid and wash with cold diethyl ether to remove excess anhydride/acetic acid.
- Result: Off-white solid. Yields typically >80%.

© 2026 BenchChem. All rights reserved.

Step 2: Chlorination to **4-Chloro-5-iodo-2-methylquinazoline**

Reagents: 5-iodo-2-methylquinazolin-4(3H)-one (1.0 eq), $POCl_3$ (Phosphorus Oxychloride, 5-10 vol), N,N-Diisopropylethylamine (DIEA, 1.5 eq).

- Safety Warning: $POCl_3$ is corrosive and reacts violently with water. Work in a fume hood.
- Suspend the quinazolinone in neat $POCl_3$ under Argon.
- Add DIEA dropwise. (Base catalysis accelerates the reaction and scavenges HCl).
- Heat to reflux (105°C) for 3–6 hours. The suspension should clear to a yellow/brown solution.
- Quenching (Exothermic): Evaporate excess $POCl_3$ under reduced pressure. Pour the residue slowly onto crushed ice/ammonia water mixture to neutralize.
- Extract with Dichloromethane (DCM). Dry over $MgSO_4$.
- Purification: Flash chromatography (Hexane/EtOAc). The 4-chloro product is liable to hydrolysis; store under inert atmosphere at -20°C.

Reactivity Profile & Orthogonality

The power of this scaffold lies in the ability to sequentially functionalize the ring.

The "Warhead" (C4-Cl)

The C4 position is highly electrophilic due to the electron-deficient pyrimidine ring.

- Reaction: SNAr (Nucleophilic Aromatic Substitution).[2]
- Nucleophiles: Anilines (for kinase inhibitors), Aliphatic amines, Alkoxides.
- Conditions: Isopropanol reflux or mild base (K_2CO_3) in DMF.

The "Diversification Handle" (C5-I)

© 2026 BenchChem. All rights reserved.

The C5-iodine is stable to SNAr conditions used at C4, allowing for chemoselective derivatization after the C4 amine is installed.

- Reaction: Pd-Catalyzed Cross-Coupling.
- Types: Suzuki (Aryl-Aryl), Sonogashira (Alkynes), Buchwald-Hartwig (Amines).
- Strategic Value: The 5-position vectors substituents into the "solvent front" or "ribose pocket" of kinase enzymes, often improving solubility or selectivity.

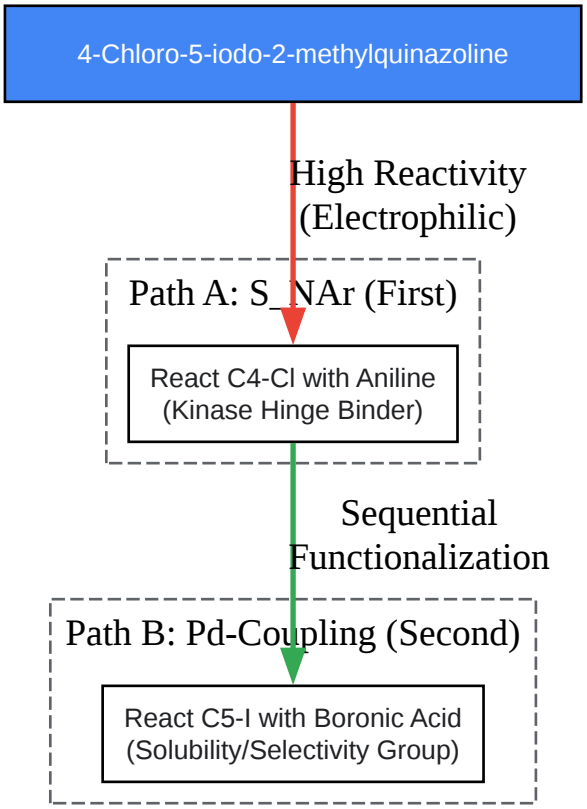

Click to download full resolution via product page

Figure 2: Orthogonal reactivity map showing the preferred order of operations (C4 substitution followed by C5 coupling).

Therapeutic Applications

This specific scaffold is a precursor to Type I and Type II Kinase Inhibitors.

© 2026 BenchChem. All rights reserved.

- EGFR Inhibitors: Analogous to Gefitinib, but the 5-iodo group allows for the introduction of solubilizing groups that interact with specific residues in the EGFR binding pocket, potentially overcoming T790M resistance.
- HSP90 Inhibitors: Quinazoline cores are used to target the ATP-binding pocket of Heat Shock Protein 90.
- Dual Inhibitors: The 2-methyl group is often essential for steric fit within the adenine binding pocket, while the 4-anilino moiety forms the crucial hydrogen bond with the hinge region (Met793 in EGFR).

References

- Wissner, A., et al. (2003). "Synthesis and structure-activity relationships of 6,7-disubstituted 4-anilinoquinoline-3-carbonitriles." Journal of Medicinal Chemistry. (Provides foundational chemistry for quinazoline/quinoline halogenation).
- Connolly, D. J., et al. (2005). "Synthesis of quinazolin-4(3H)-ones and their conversion to 4-chloroquinazolines." Tetrahedron. (Detailed protocol for POCl3 chlorination mechanisms).
- Bridges, A. J. (2001). "The rationale and strategy for the development of specific inhibitors of the EGF receptor tyrosine kinase." Chemical Reviews. (Explains the SAR of the 4-anilinoquinazoline scaffold).
- PubChem Compound Summary. "4-Chloro-2-methylquinazoline derivatives." (Used for physicochemical property estimation).[3]

Need Custom Synthesis?

BenchChem offers custom synthesis for rare earth carbides and specific isotopiclabeling.

Email: info@benchchem.com or Request Quote Online.

Sources

- 1. 4-chloro-N-[4-({[6-methyl-2-(methylamino)quinazolin-4-yl]amino}methyl)phenyl]benzamide | C24H22ClN5O | CID 25025710 - PubChem [pubchem.ncbi.nlm.nih.gov]

- 2. pubs.rsc.org [pubs.rsc.org]
- 3. 4-Chloro-2-methylquinoline | C10H8ClN | CID 77973 - PubChem [pubchem.ncbi.nlm.nih.gov]
- To cite this document: BenchChem. [Technical Monograph: 4-Chloro-5-iodo-2-methylquinazoline]. BenchChem, [2026]. [Online PDF]. Available at: [https://www.benchchem.com/product/b13006463/docs#technical-monograph-4-chloro-5-iodo-2-methylquinazoline]

Disclaimer & Data Validity:

The information provided in this document is for Research Use Only (RUO) and is strictly not intended for diagnostic or therapeutic procedures. While BenchChem strives to provide accurate protocols, we make no warranties, express or implied, regarding the fitness of this product for every specific experimental setup.

Technical Support: The protocols provided are for reference purposes. Unsure if this reagent suits your experiment?

Need Industrial/Bulk Grade? Request Custom Synthesis Quote

BenchChem

Our mission is to be the trusted global source of essential and advanced chemicals, empowering scientists and researchers to drive progress in science and industry.

Contact

Address: 3281 E Guasti Rd

Ontario, CA 91761, United States

Phone: (601) 213-4426

Email: info@benchchem.com

Contact our Ph.D. Support Team for a compatibility check

© 2026 BenchChem. All rights reserved.

© 2026 BenchChem. All rights reserved.