Comparative Guide: Mass Spectrometry Profiling of Chlorinated Aminopyridines

Author: BenchChem Technical Support Team. **Date**: May 2026

Compound of Interest

Compound Name:	*4-Chloro-3-(4-fluorophenyl)pyridin-2-amine*
Cat. No.:	*B13003619*

Get Quote

Executive Summary

Chlorinated aminopyridines (e.g., 2-amino-5-chloropyridine) serve as essential scaffolds in drug discovery.[1] Their analysis is complicated by the existence of multiple regioisomers (e.g., 2-amino-3-chloro vs. 2-amino-5-chloro) that exhibit identical molecular weights but distinct biological reactivities.

This guide compares the two dominant analytical "alternatives" for characterizing these compounds: Electron Ionization (EI-MS) and Electrospray Ionization Tandem Mass Spectrometry (ESI-MS/MS). While EI provides robust structural fingerprinting suitable for library matching, ESI-MS/MS offers superior sensitivity and the capability to distinguish isomers through energy-resolved fragmentation.

Technique Comparison: EI vs. ESI-MS/MS

Alternative A: Electron Ionization (EI-MS)

The Structural Fingerprint Standard

EI is a "hard" ionization technique (70 eV) that generates radical cations (

© 2026 BenchChem. All rights reserved.

). For chlorinated aminopyridines, the aromatic ring provides significant stability, often yielding a strong molecular ion, but the high energy induces characteristic bond ruptures useful for identification.

- Primary Mechanism: Formation of odd-electron radical cations followed by homolytic cleavage or rearrangement.
- Key Spectral Features:
  - Molecular Ion (

    ): Typically the base peak (100% abundance) due to resonance stabilization of the pyridine ring.
  - Isotope Pattern: Distinct 3:1 ratio at

    M and M+2 (characteristic of

    and

).[2]
  - fragmentation: Sequential loss of HCN (common in pyridines) and Cl radicals.

Alternative B: ESI-MS/MS (Triple Quadrupole / Q-TOF)

The Sensitivity & Quantitation Specialist

ESI is a "soft" ionization technique generating even-electron protonated molecules (

). Fragmentation is only induced via Collision-Induced Dissociation (CID), allowing for controlled, tunable breakage.

- Primary Mechanism: Protonation at the ring nitrogen or exocyclic amine, followed by charge-migration driven fragmentation.
- Key Spectral Features:
  - Precursor Ion: Exclusively

© 2026 BenchChem. All rights reserved.

(e.g.,

129 for chloropyridinamine).

- Product Ions: Loss of

(ammonia) and

are dominant.

- Isomer Differentiation: Varying collision energies (CE) can reveal differences in the stability of the C-Cl bond depending on its position relative to the protonated nitrogen.

Comparative Data Summary

Feature	Electron Ionization (EI)	ESI-MS/MS (CID)
Ion Type	Radical Cation ( )	Protonated Molecule ( )
Limit of Detection	Nanogram range (GC-MS)	Picogram/Femtogram range (LC-MS)
Isomer Specificity	Moderate (Spectral library matching)	High (Transition ratio monitoring)
Sample State	Gas phase (requires volatility)	Liquid phase (compatible with biological matrices)
Key Fragment (Loss)	(27 Da), (35 Da)	(17 Da), (27 Da)

Deep Dive: Fragmentation Mechanisms

Understanding the specific fragmentation pathways is crucial for interpreting spectra and setting up Multiple Reaction Monitoring (MRM) transitions.

Pathway Analysis

- HCN Elimination: A hallmark of the pyridine ring. The ring opens, expelling neutral HCN.

© 2026 BenchChem. All rights reserved.

- Chlorine Loss: In EI, this is often a radical loss (

). In ESI, it may occur as

  loss if a proton is available nearby.

- Ammonia Loss: Specific to ESI, where the protonated exocyclic amine is ejected as neutral

  .

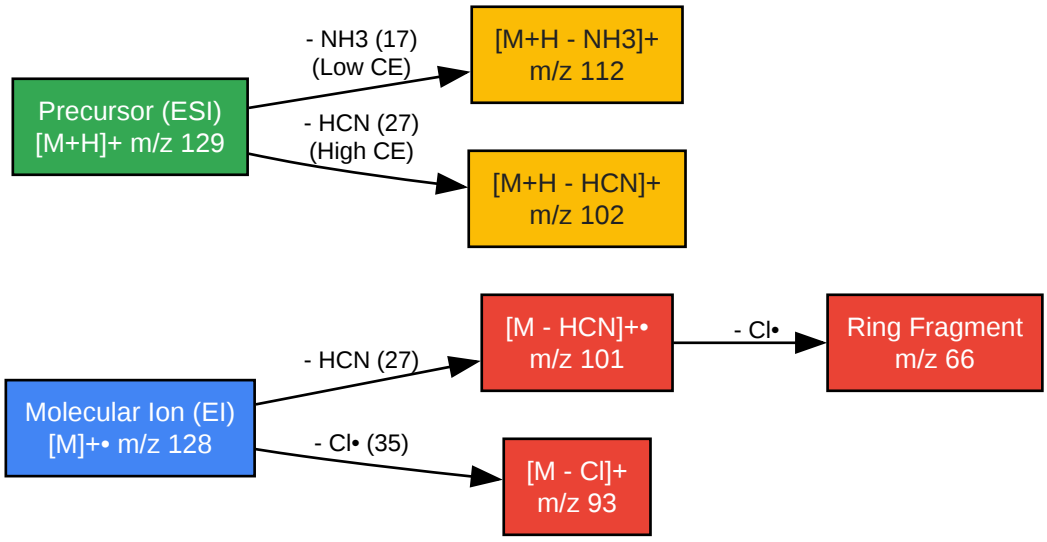

Click to download full resolution via product page

Figure 1: Comparative fragmentation pathways for 2-amino-5-chloropyridine under EI (blue) and ESI (green) conditions.

Case Study: Distinguishing Regioisomers

Scenario: Differentiating 2-amino-5-chloropyridine (Target) from 2-amino-3-chloropyridine (Impurity).

These isomers are difficult to separate chromatographically. MS fragmentation patterns provide the necessary orthogonality.

- 2-Amino-5-chloropyridine: The Cl atom is para to the amino group and meta to the ring nitrogen. The structure is electronically stable.

© 2026 BenchChem. All rights reserved.

- Observation: Dominant parent ion; fragmentation requires higher energy.

- 2-Amino-3-chloropyridine: The Cl atom is ortho to the amino group. This proximity allows for an "Ortho Effect."
  - Observation: Enhanced loss of

    or

    due to interaction between the amino hydrogen and the ortho-chlorine.

Experimental Data: Relative Ion Abundance (Normalized)

Ion ( )	Identity	2-Amino-5-Cl (Target)	2-Amino-3-Cl (Ortho-Isomer)
128		100%	100%
101		35%	20%
93		10%	45% (Enhanced)
92		< 2%	15% (Ortho Effect)

Note: The enhanced abundance of m/z 93 and 92 in the 3-chloro isomer is the diagnostic differentiator.

Experimental Protocol: LC-MS/MS Method

Objective: Establish a validated method for quantifying chlorinated aminopyridines in reaction mixtures.

Step 1: Sample Preparation

- Dissolution: Dissolve 1 mg of sample in 1 mL of Methanol (HPLC grade).

- Dilution: Dilute to 1 µg/mL using 0.1% Formic Acid in Water/Acetonitrile (50:50 v/v).

- Filtration: Filter through a 0.22 µm PTFE syringe filter to remove particulates.

© 2026 BenchChem. All rights reserved.

Step 2: LC Conditions

- Column: C18 Reverse Phase (e.g., Agilent ZORBAX Eclipse Plus, 2.1 x 50 mm, 1.8 µm).
- Mobile Phase A: Water + 0.1% Formic Acid.
- Mobile Phase B: Acetonitrile + 0.1% Formic Acid.
- Gradient: 5% B to 95% B over 5 minutes.
- Flow Rate: 0.4 mL/min.

Step 3: MS/MS Parameters (ESI Positive)

- Source Temp: 350°C.
- Capillary Voltage: 3.5 kV.
- MRM Transitions:
  - Quantifier:

    (Loss of Cl, CE: 20 eV).
  - Qualifier 1:

    (Loss of

    , CE: 15 eV).
  - Qualifier 2:

    (Loss of HCN, CE: 25 eV).

© 2026 BenchChem. All rights reserved.

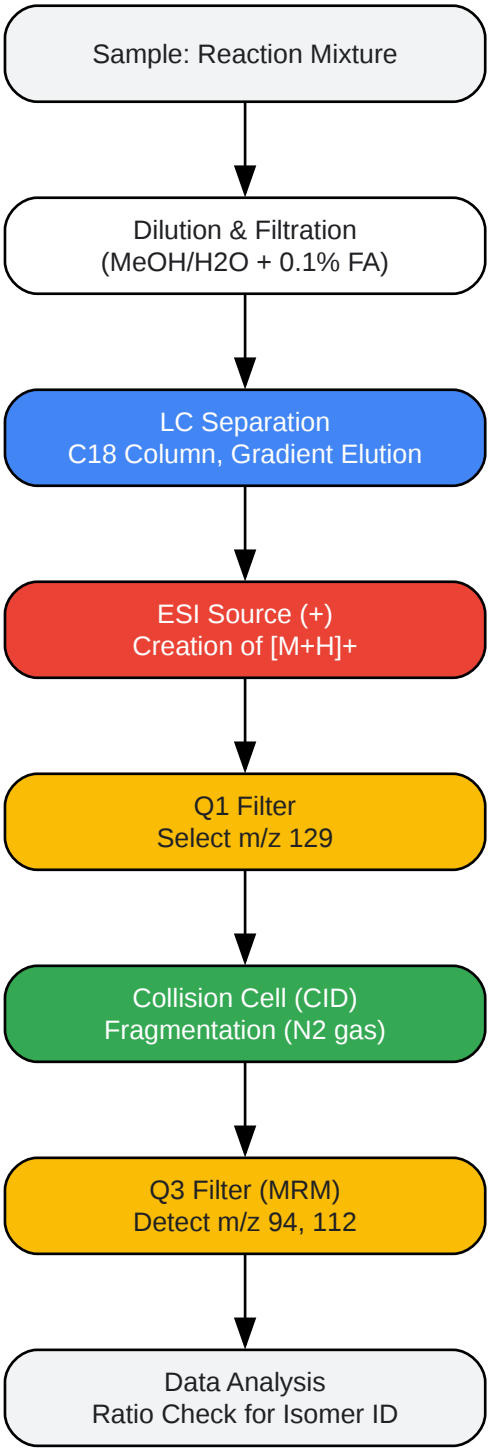

Click to download full resolution via product page

Figure 2: Workflow for the targeted LC-MS/MS analysis of chlorinated aminopyridines.

References

© 2026 BenchChem. All rights reserved.

- NIST Mass Spectrometry Data Center.2-Amino-5-chloropyridine Mass Spectrum. National Institute of Standards and Technology.[3] Available at: [Link]
- ChemGuide.Fragmentation Patterns in Mass Spectra: Chlorine Isotope Effects. Available at: [Link]

Need Custom Synthesis?

BenchChem offers custom synthesis for rare earth carbides and specific isotopiclabeling.

Email: info@benchchem.com or Request Quote Online.

Sources

- 1. 2-Amino-5-chloropyridine: An In-Depth Exploration_Chemicalbook [chemicalbook.com]
- 2. chemguide.co.uk [chemguide.co.uk]
- 3. 2-Amino-5-chloropyridine [webbook.nist.gov]
- To cite this document: BenchChem. [Comparative Guide: Mass Spectrometry Profiling of Chlorinated Aminopyridines]. BenchChem, [2026]. [Online PDF]. Available at: [https://www.benchchem.com/product/b13003619/docs#comparative-guide-mass-spectrometry-profiling-of-chlorinated-aminopyridines]

Disclaimer & Data Validity:

The information provided in this document is for Research Use Only (RUO) and is strictly not intended for diagnostic or therapeutic procedures. While BenchChem strives to provide accurate protocols, we make no warranties, express or implied, regarding the fitness of this product for every specific experimental setup.

Technical Support: The protocols provided are for reference purposes. Unsure if this reagent suits your experiment?

Need Industrial/Bulk Grade? Request Custom Synthesis Quote

© 2026 BenchChem. All rights reserved.

BenchChem

Our mission is to be the trusted global source of essential and advanced chemicals, empowering scientists and researchers to drive progress in science and industry.

Contact

Address: 3281 E Guasti Rd

Ontario, CA 91761, United States

Phone: (601) 213-4426

Email: info@benchchem.com

Contact our Ph.D. Support Team for a compatibility check

© 2026 BenchChem. All rights reserved.