Technical Support Center: Synthesis of n-(2-Aminophenyl)methanesulfonamide

Author: BenchChem Technical Support Team. **Date**: May 2026

Compound of Interest

Compound Name:	*n-(2-Aminophenyl)methanesulfonamide*
CAS No.:	*37073-18-0*
Cat. No.:	*B1295899*

Get Quote

This technical support center provides troubleshooting guides and frequently asked questions (FAQs) for researchers, scientists, and drug development professionals engaged in the synthesis of **n-(2-Aminophenyl)methanesulfonamide**. The information is designed to directly address common challenges and side reactions encountered during this synthetic process.

Frequently Asked Questions (FAQs)

Q1: What are the most common side reactions in the synthesis of **n-(2-Aminophenyl)methanesulfonamide** from o-phenylenediamine and methanesulfonyl chloride?

A1: The most prevalent side reactions are the formation of the di-substituted byproduct, N,N'-bis(methylsulfonyl)-o-phenylenediamine, and potential cyclization to form benzimidazole-related structures. Additionally, oxidation of the o-phenylenediamine starting material or the final product can lead to colored impurities.

Q2: How can I minimize the formation of the di-sulfonated byproduct?

© 2026 BenchChem. All rights reserved.

A2: To favor mono-sulfonylation, it is crucial to control the stoichiometry of the reactants. Using a 1:1 molar ratio of o-phenylenediamine to methanesulfonyl chloride is a good starting point. Slow, dropwise addition of the methanesulfonyl chloride to a cooled solution of o-phenylenediamine can also help improve selectivity by maintaining a low concentration of the sulfonating agent throughout the reaction.

Q3: My final product is discolored (e.g., pink, brown, or yellow). What is the cause and how can I resolve this?

A3: Discoloration is typically due to the oxidation of the aromatic amine functionalities. Both o-phenylenediamine and **n-(2-Aminophenyl)methanesulfonamide** are susceptible to air and light-induced oxidation. To mitigate this, it is advisable to perform the reaction and subsequent work-up under an inert atmosphere (e.g., nitrogen or argon). For purification, treating the crude product with activated charcoal during recrystallization can help remove colored impurities.

Q4: I am observing multiple spots on my TLC plate. What are the likely impurities?

A4: Besides the desired product, common impurities that may appear on a TLC plate include:

- Unreacted o-phenylenediamine: This will likely be a more polar spot.
- N,N'-bis(methylsulfonyl)-o-phenylenediamine: This di-substituted product is generally less polar than the mono-substituted product.
- Benzimidazole-related byproducts: These may have varying polarities depending on their specific structure.
- Oxidation products: These often appear as colored streaks or spots.

Q5: How can I effectively purify the crude **n-(2-Aminophenyl)methanesulfonamide**?

A5: The primary methods for purification are column chromatography and recrystallization.

- Column Chromatography: Silica gel chromatography is effective for separating the mono-sulfonated product from the less polar di-sulfonated byproduct and more polar unreacted starting material. A gradient elution system, for example, starting with a non-polar solvent system (e.g., hexane/ethyl acetate) and gradually increasing the polarity, is often successful.

© 2026 BenchChem. All rights reserved.

- Recrystallization: If the crude product is relatively pure, recrystallization from a suitable solvent system (e.g., ethanol/water or ethyl acetate/hexane) can be an efficient method for removing minor impurities.

Troubleshooting Guides

Problem 1: Low Yield of n-(2-Aminophenyl)methanesulfonamide

Potential Cause	Suggested Solution
Incomplete Reaction	- Monitor the reaction progress using Thin Layer Chromatography (TLC) or High-Performance Liquid Chromatography (HPLC) to ensure the consumption of the starting material. - Increase the reaction time or modestly increase the temperature, while monitoring for byproduct formation.
Formation of Di-substituted Byproduct	- Strictly control the stoichiometry to a 1:1 molar ratio of o-phenylenediamine to methanesulfonyl chloride. - Add the methanesulfonyl chloride solution dropwise to the reaction mixture at a low temperature (e.g., 0 °C) to maintain a low concentration of the electrophile.
Product Loss During Workup	- The product may have some solubility in the aqueous phase. Minimize the volume of water used for washing. - Optimize the pH during aqueous extraction to ensure the product is in its neutral, less water-soluble form. - Perform multiple extractions with an appropriate organic solvent (e.g., ethyl acetate) to maximize recovery from the aqueous layer.
Hydrolysis of Methanesulfonyl Chloride	- Ensure all glassware is thoroughly dried and the reaction is conducted under anhydrous conditions. - Use a high-purity, anhydrous solvent for the reaction.

© 2026 BenchChem. All rights reserved.

Problem 2: Presence of Significant Amounts of N,N'-bis(methylsulfonyl)-o-phenylenediamine

Potential Cause	Suggested Solution
Incorrect Stoichiometry	- Carefully re-verify the molar equivalents of both o-phenylenediamine and methanesulfonyl chloride. An excess of the sulfonyl chloride will favor di-substitution.
High Reaction Temperature	- High temperatures can increase the rate of the second sulfonylation reaction. Maintain a lower reaction temperature, especially during the addition of the methanesulfonyl chloride.
Rapid Addition of Reagent	- A high local concentration of methanesulfonyl chloride can lead to di-substitution. Employ slow, dropwise addition with vigorous stirring to ensure rapid dispersion of the reagent.

Experimental Protocols

General Protocol for the Synthesis of n-(2-Aminophenyl)methanesulfonamide

This is a generalized protocol and may require optimization.

- Reaction Setup: In a round-bottom flask equipped with a magnetic stirrer and under an inert atmosphere (e.g., nitrogen), dissolve o-phenylenediamine (1.0 equivalent) in a suitable anhydrous solvent (e.g., dichloromethane, tetrahydrofuran, or acetonitrile). Add a non-nucleophilic base such as triethylamine or pyridine (1.1-1.2 equivalents).
- Reagent Addition: Cool the solution to 0 °C in an ice bath. Slowly add a solution of methanesulfonyl chloride (1.0 equivalent) in the same anhydrous solvent dropwise to the cooled mixture with constant, vigorous stirring.
- Reaction Monitoring: Allow the reaction to slowly warm to room temperature and continue stirring for 2-6 hours. Monitor the progress of the reaction by TLC until the starting material is

© 2026 BenchChem. All rights reserved.

consumed.

- Workup: Quench the reaction by adding water or a saturated aqueous solution of sodium bicarbonate. Separate the organic layer. Wash the organic layer sequentially with dilute acid (e.g., 1M HCl) to remove excess base, followed by saturated sodium bicarbonate solution, and finally brine.
- Isolation: Dry the organic layer over anhydrous sodium sulfate or magnesium sulfate, filter, and concentrate under reduced pressure to obtain the crude product.
- Purification: Purify the crude product by column chromatography on silica gel or by recrystallization from an appropriate solvent system.

Visualizations

Reaction Pathway and Side Reactions

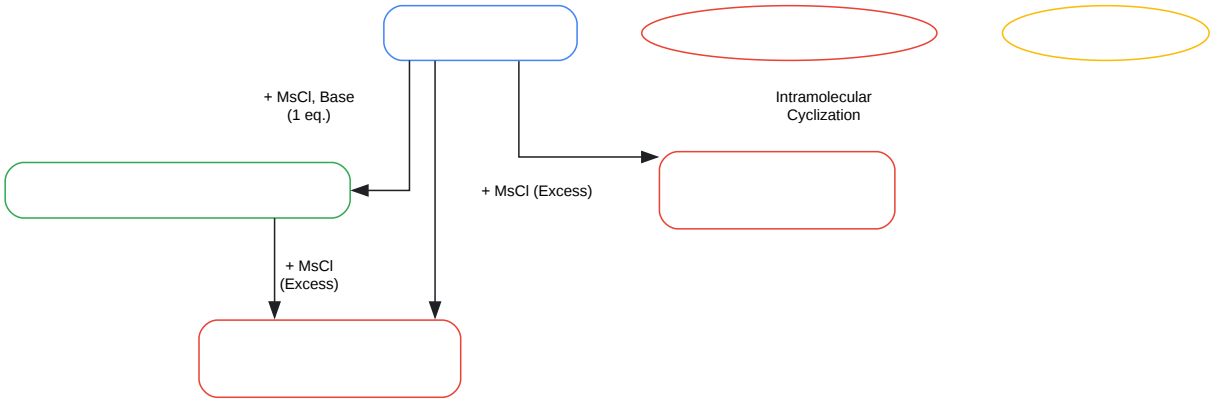

Click to download full resolution via product page

Caption: Main reaction pathway and potential side reactions in the synthesis of **n-(2-Aminophenyl)methanesulfonamide**.

© 2026 BenchChem. All rights reserved.

Experimental Workflow

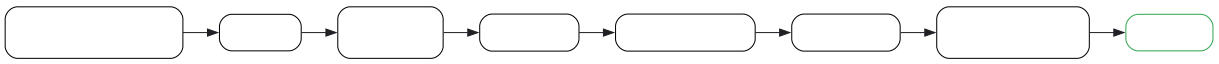

Click to download full resolution via product page

Caption: A typical experimental workflow for the synthesis and purification of **n-(2-Aminophenyl)methanesulfonamide**.

Troubleshooting Logic for Low Yield

© 2026 BenchChem. All rights reserved.

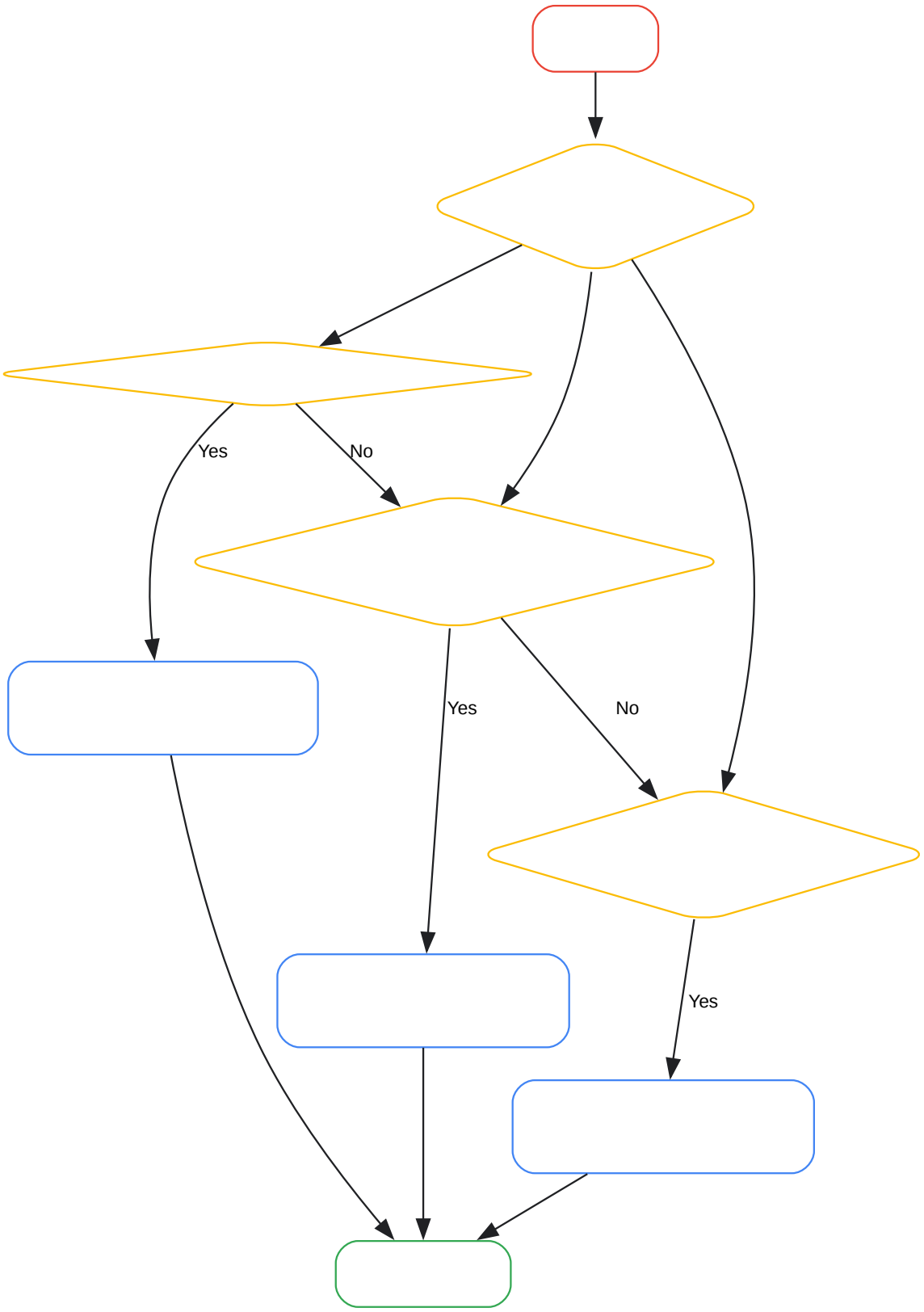

Click to download full resolution via product page

Caption: A logical troubleshooting guide for addressing low product yield.

© 2026 BenchChem. All rights reserved.

- To cite this document: BenchChem. [Technical Support Center: Synthesis of n-(2-Aminophenyl)methanesulfonamide]. BenchChem, [2026]. [Online PDF]. Available at: [https://www.benchchem.com/product/b1295899/docs#technical-support-center-synthesis-of-n-2-aminophenyl-methanesulfonamide]

Disclaimer & Data Validity:

The information provided in this document is for Research Use Only (RUO) and is strictly not intended for diagnostic or therapeutic procedures. While BenchChem strives to provide accurate protocols, we make no warranties, express or implied, regarding the fitness of this product for every specific experimental setup.

Technical Support: The protocols provided are for reference purposes. Unsure if this reagent suits your experiment?

Need Industrial/Bulk Grade? Request Custom Synthesis Quote

BenchChem

Our mission is to be the trusted global source of essential and advanced chemicals, empowering scientists and researchers to drive progress in science and industry.

Contact

Address: 3281 E Guasti Rd

Ontario, CA 91761, United States

Phone: (601) 213-4426

Email: info@benchchem.com

Contact our Ph.D. Support Team for a compatibility check