A Technical Guide to the Structural Elucidation of 2-Amino-6-hydroxy-quinoline

Author: BenchChem Technical Support Team. **Date**: May 2026

Compound of Interest

Compound Name:	*2-Amino-6-hydroxy-quinoline*
CAS No.:	*90417-15-5*
Cat. No.:	*B1290474*

Get Quote

Distribution: For Researchers, Scientists, and Drug Development Professionals

Abstract: Quinoline and its derivatives are foundational scaffolds in medicinal chemistry, exhibiting a wide array of biological activities.[1][2] The precise three-dimensional arrangement of atoms within these molecules, determinable by single-crystal X-ray diffraction, is paramount for understanding structure-activity relationships and designing next-generation therapeutics. This guide provides a comprehensive, technically-grounded workflow for the complete crystal structure analysis of **2-Amino-6-hydroxy-quinoline**. As a definitive crystal structure for this specific molecule is not readily available in open-access databases, this document outlines the necessary experimental and computational protocols to proceed from synthesis to final structural elucidation and validation. The causality behind each methodological choice is explained to empower researchers in adapting these principles to similar novel compounds.

Introduction: The Significance of the Quinoline Scaffold

Quinoline, a heterocyclic aromatic compound, consists of a benzene ring fused to a pyridine ring.[3] This structural motif is present in numerous natural alkaloids, most famously quinine,

© 2026 BenchChem. All rights reserved.

and serves as a core component in a multitude of synthetic pharmaceutical agents.[2] The functionalization of the quinoline ring, such as with amino and hydroxyl groups in **2-Amino-6-hydroxy-quinoline**, creates specific hydrogen bonding capabilities and electronic properties that dictate the molecule's interaction with biological targets.

Determining the exact crystal structure provides unambiguous data on:

- Molecular Geometry: Precise bond lengths, bond angles, and torsion angles.[4]
- Intermolecular Interactions: Hydrogen bonding networks, π-π stacking, and van der Waals forces that govern crystal packing.
- Conformational Analysis: The preferred spatial orientation of substituent groups.
- Absolute Configuration: The absolute stereochemistry of chiral centers.[5]

This information is invaluable for computational modeling, rational drug design, and understanding the physicochemical properties of the solid state, which are critical for drug development.

The Experimental Workflow: From Powder to Structure

The journey to elucidating a crystal structure is a multi-step process that demands precision at every stage. The quality of the final structure is entirely dependent on the quality of the initial single crystal.

© 2026 BenchChem. All rights reserved.

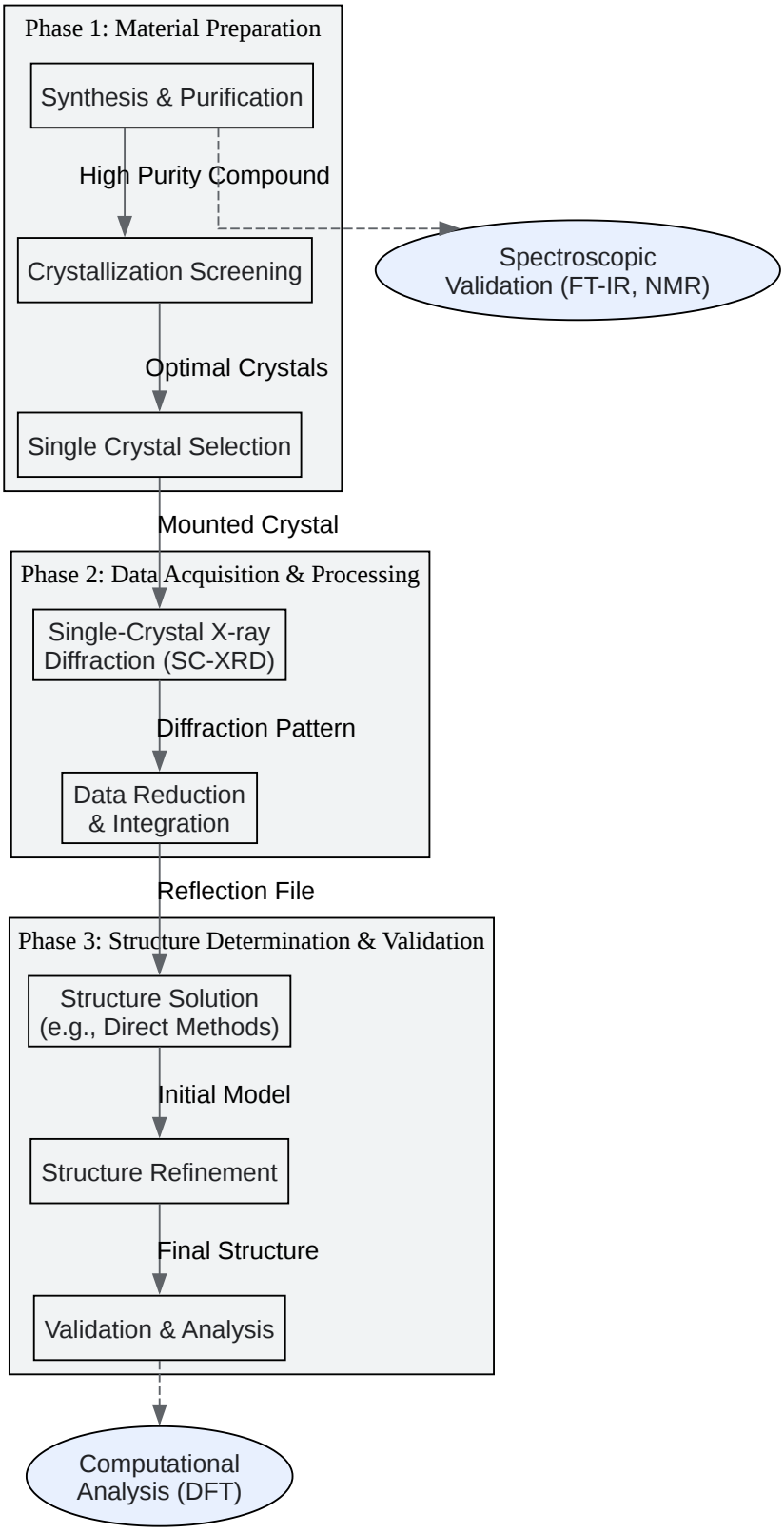

© 2026 BenchChem. All rights reserved.

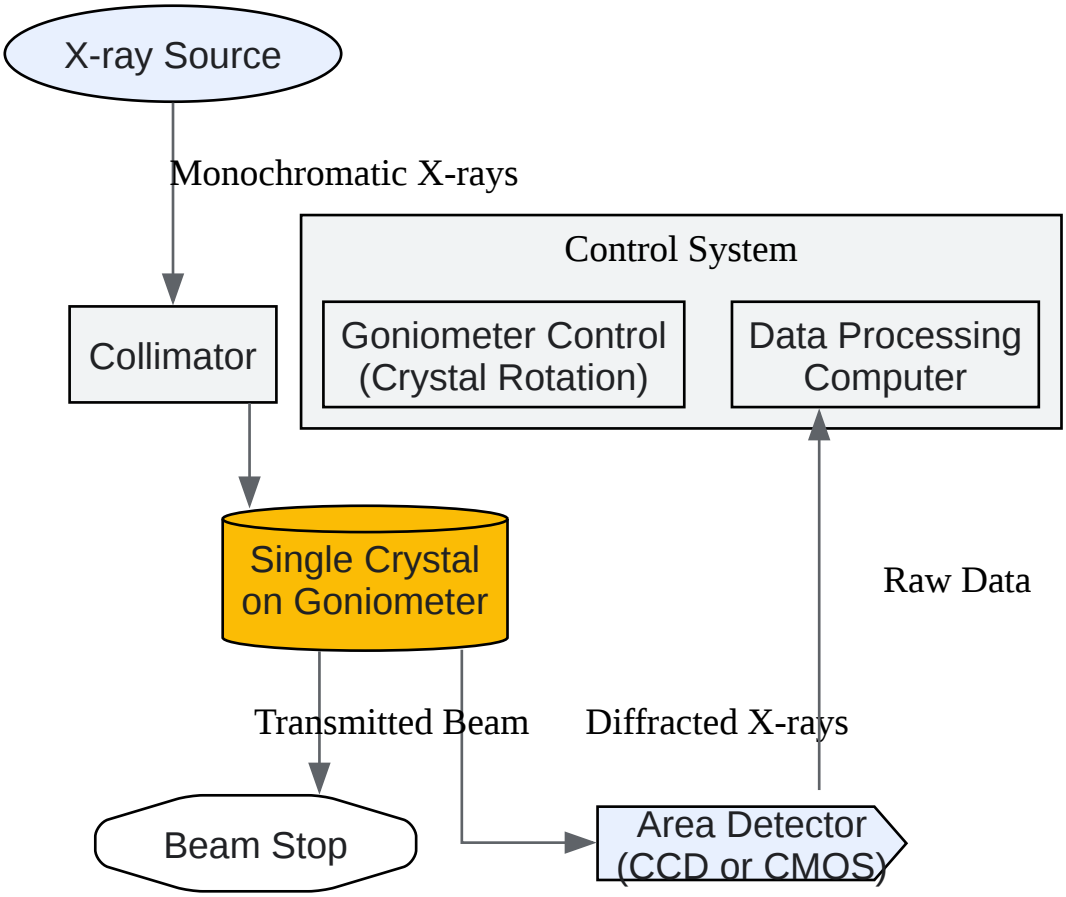

Click to download full resolution via product page

Need Custom Synthesis?

BenchChem offers custom synthesis for rare earth carbides and specific isotopiclabeling.

Email: info@benchchem.com or Request Quote Online.

Sources

- 1. iipseries.org [iipseries.org]
- 2. Quinoline - Wikipedia [en.wikipedia.org]
- 3. uop.edu.pk [uop.edu.pk]
- 4. creative-biostructure.com [creative-biostructure.com]
- 5. rigaku.com [rigaku.com]

© 2026 BenchChem. All rights reserved.

- To cite this document: BenchChem. [A Technical Guide to the Structural Elucidation of 2-Amino-6-hydroxy-quinoline]. BenchChem, [2026]. [Online PDF]. Available at: [https://www.benchchem.com/product/b1290474/docs#a-technical-guide-to-the-structural-elucidation-of-2-amino-6-hydroxy-quinoline]

Disclaimer & Data Validity:

The information provided in this document is for Research Use Only (RUO) and is strictly not intended for diagnostic or therapeutic procedures. While BenchChem strives to provide accurate protocols, we make no warranties, express or implied, regarding the fitness of this product for every specific experimental setup.

Technical Support: The protocols provided are for reference purposes. Unsure if this reagent suits your experiment?

Need Industrial/Bulk Grade? Request Custom Synthesis Quote

BenchChem

Our mission is to be the trusted global source of essential and advanced chemicals, empowering scientists and researchers to drive progress in science and industry.

Contact

Address: 3281 E Guasti Rd

Ontario, CA 91761, United States

Phone: (601) 213-4426

Email: info@benchchem.com

Contact our Ph.D. Support Team for a compatibility check

© 2026 BenchChem. All rights reserved.