# Application Notes and Protocols for Studying β4GalNAcT Gene Function Using CRISPR

**Author**: BenchChem Technical Support Team. **Date**: April 2026

***Compound of Interest***

*Compound Name:* *Lacdinac*

*Cat. No.:* *B12845225*

*Get Quote*

For Researchers, Scientists, and Drug Development Professionals

## Introduction

The β4-N-acetylgalactosaminyltransferase (β4GalNAcT) gene family plays a crucial role in post-translational modification by synthesizing N,N'-diacetyllactosamine (**LacdiNAc**) structures on glycans. These modifications are implicated in a variety of cellular processes, including cell signaling, adhesion, and differentiation. Dysregulation of β4GalNAcT gene expression has been linked to several diseases, most notably cancer, where it can influence tumor progression and metastasis. The advent of CRISPR-Cas9 technology provides a powerful tool for precisely editing the genome to study the function of these genes with high specificity.

This document provides detailed application notes and protocols for utilizing CRISPR-based technologies—including CRISPR knockout (CRISPR-KO), CRISPR interference (CRISPRi), and CRISPR activation (CRISPRa)—to investigate the functional roles of β4GalNAcT genes.

## Data Presentation

© 2026 BenchChem. All rights reserved.

## Table 1: Functional Consequences of CRISPR-mediated Perturbation of β4GalNAcT Genes

This table summarizes the quantitative effects of altering β4GalNAcT gene expression on cellular phenotypes.

| Gene Target | CRISPR Method | Cell Line | Phenotypic Assay | Quantitative Result | Reference |
|---|---|---|---|---|---|
| B4GALNT2 | CRISPR/Cas9 Knockout Screen | Huh7 | Human Parainfluenza Virus 3 (hPIV3) Infection | Identified as a potent restriction factor for hPIV3 infection. | [1][2] |
| B4GALNT2 | CRISPRa Screen | A549 | Influenza A Virus (IAV) Infection | Overexpression of B4GALNT2 showed inhibitory activity against IAV with α2,3-linked sialic acid receptor preference. | [1] |

## Table 2: Effects of B4GALNT3 Knockdown (via siRNA) on Cancer Cell Phenotypes

This table presents data from siRNA-mediated knockdown studies on B4GALNT3, providing insights into its function that can be further explored using CRISPR.

© 2026 BenchChem. All rights reserved.

| Cell Line | Phenotypic Assay | Quantitative Result | Reference |
|---|---|---|---|
| HCT116 | EGF-induced Sphere Formation | ~50% reduction in sphere formation upon B4GALNT3 knockdown. | |
| SW480 | EGF-induced Sphere Formation | ~60% reduction in sphere formation upon B4GALNT3 knockdown. | |
| HCT116 | Transwell Migration (EGF-induced) | ~70% reduction in cell migration upon B4GALNT3 knockdown. | |
| SW480 | Transwell Migration (EGF-induced) | ~65% reduction in cell migration upon B4GALNT3 knockdown. | |
| HCT116 | Matrigel Invasion (EGF-induced) | ~80% reduction in cell invasion upon B4GALNT3 knockdown. | |
| SW480 | Matrigel Invasion (EGF-induced) | ~75% reduction in cell invasion upon B4GALNT3 knockdown. | |

# Signaling Pathways and Experimental Workflows

## Signaling Pathways Involving β4GalNAcT3

B4GALNT3 has been shown to modulate key signaling pathways involved in cancer progression by glycosylating and altering the function of cell surface receptors.

© 2026 BenchChem. All rights reserved.

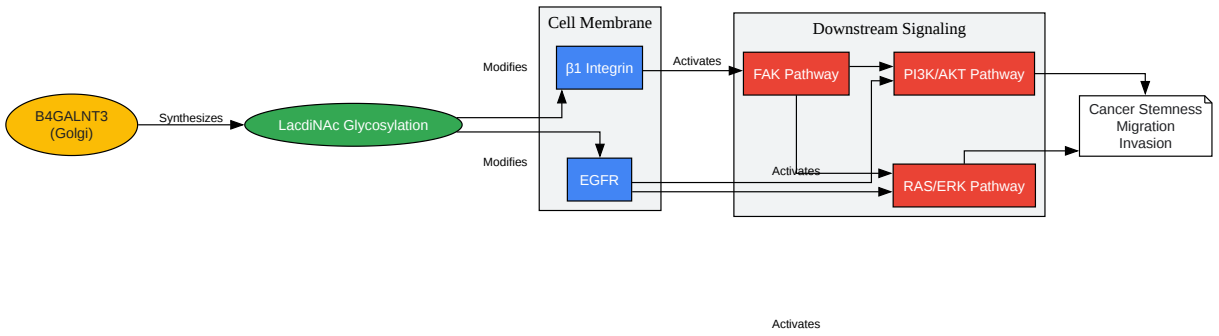


Click to download full resolution via product page

Caption: B4GALNT3 modulates EGFR and β1 Integrin signaling through **LacdiNAc** glycosylation.

# Experimental Workflow: CRISPR/Cas9-mediated Gene Knockout

This workflow outlines the key steps for generating and validating a β4GalNAcT knockout cell line.

© 2026 BenchChem. All rights reserved.

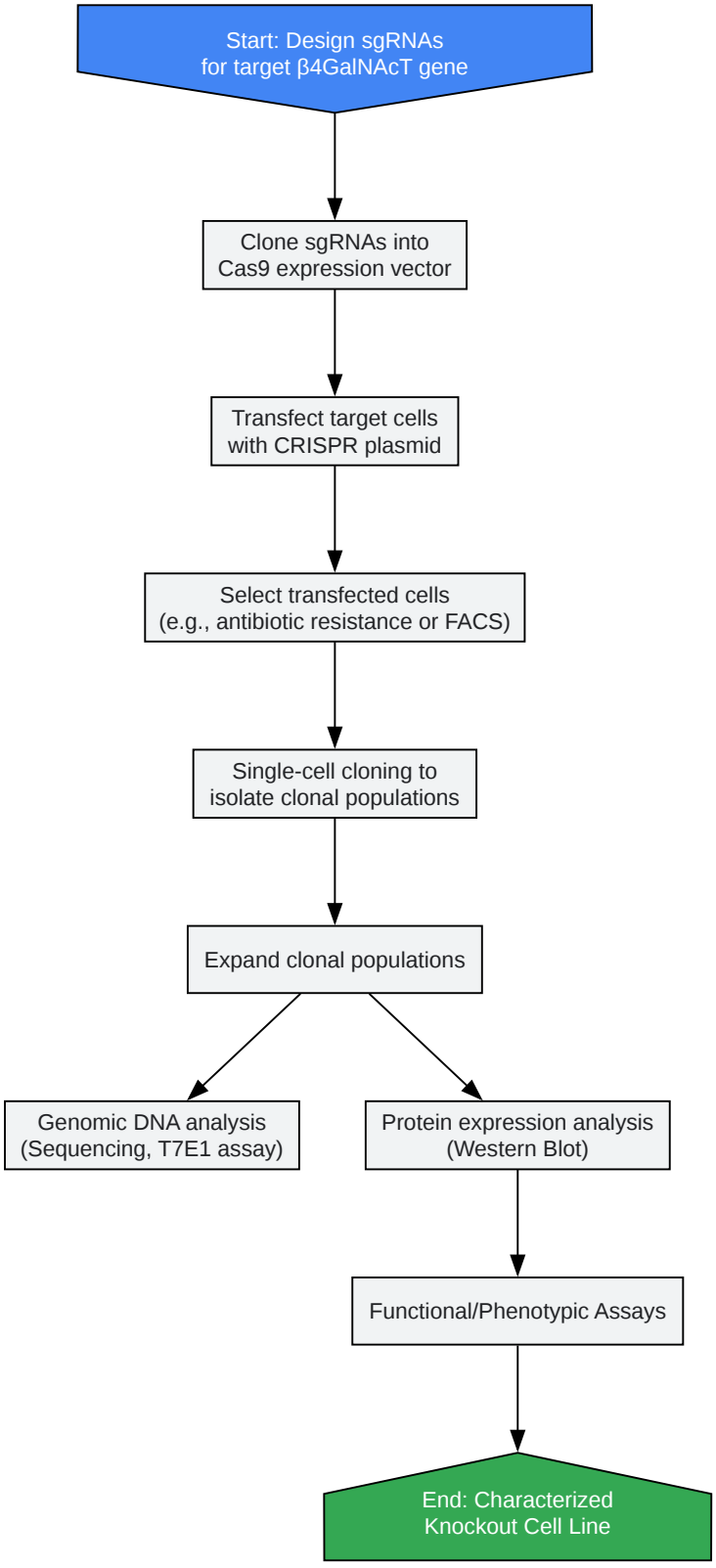


Click to download full resolution via product page

© 2026 BenchChem. All rights reserved.

Caption: Workflow for generating and validating a β4GalNAcT knockout cell line using CRISPR/Cas9.

## Logical Relationship: CRISPRi-mediated Gene Silencing

This diagram illustrates the mechanism of CRISPRi for transcriptional repression of β4GalNAcT genes.

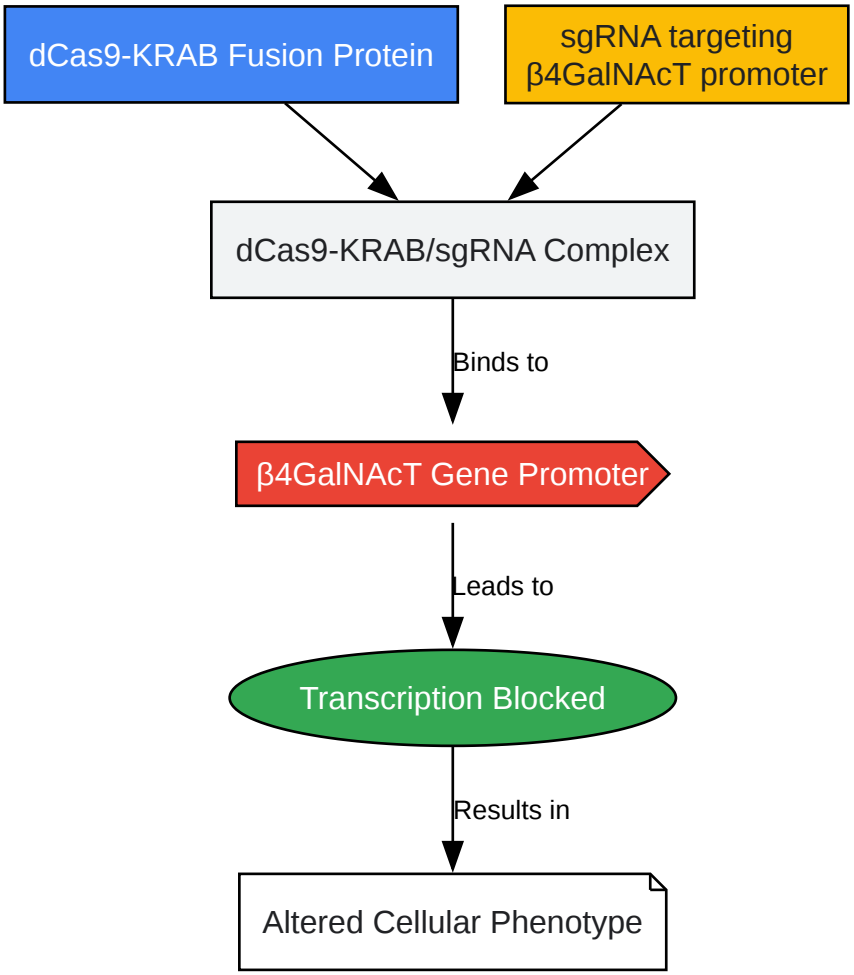


Click to download full resolution via product page

Caption: Mechanism of CRISPRi-mediated transcriptional silencing of a β4GalNAcT gene.

# Experimental Protocols

## Protocol 1: CRISPR/Cas9-Mediated Knockout of a β4GalNAcT Gene in Mammalian Cells

© 2026 BenchChem. All rights reserved.

This protocol describes the generation of a stable knockout cell line for a target β4GalNAcT gene.

Materials:

- Target mammalian cell line (e.g., HEK293T, Huh7)
- pSpCas9(BB)-2A-GFP (PX458) plasmid (Addgene #48138) or similar all-in-one CRISPR vector
- Oligonucleotides for sgRNA cloning (designed to target an early exon of the β4GalNAcT gene)
- BbsI restriction enzyme and T4 DNA ligase
- Competent E. coli
- Plasmid purification kit
- Lipofectamine 3000 or other suitable transfection reagent
- FACS buffer (PBS with 2% FBS)
- 96-well plates for single-cell cloning
- Genomic DNA extraction kit
- Primers for amplifying the target genomic region
- T7 Endonuclease I assay kit (optional)
- Antibody against the target β4GalNAcT protein for Western blot

Procedure:

- sgRNA Design and Cloning:
  - Design two sgRNAs targeting an early constitutive exon of the target β4GalNAcT gene using a web-based tool (e.g., CHOPCHOP).

© 2026 BenchChem. All rights reserved.

- Synthesize complementary oligonucleotides for each sgRNA with appropriate overhangs for cloning into the BbsI site of the pSpCas9(BB)-2A-GFP vector.
- Anneal the complementary oligos.
- Digest the pSpCas9(BB)-2A-GFP vector with BbsI.
- Ligate the annealed sgRNA oligos into the digested vector.
- Transform the ligation product into competent E. coli, select colonies, and verify the correct insertion by Sanger sequencing.

- Transfection:
  - Plate the target cells in a 6-well plate to be 70-80% confluent on the day of transfection.
  - Transfect the cells with the validated sgRNA-Cas9 plasmid using Lipofectamine 3000 according to the manufacturer's protocol.
- FACS-based Sorting of Transfected Cells:
  - 48 hours post-transfection, harvest the cells.
  - Resuspend the cells in FACS buffer.
  - Sort GFP-positive cells into individual wells of a 96-well plate containing conditioned media.
- Clonal Expansion:
  - Culture the single-cell clones until they form visible colonies.
  - Expand the clones into larger culture vessels.
- Validation of Knockout:
  - Genomic DNA Analysis:
    - Extract genomic DNA from each clonal population.

© 2026 BenchChem. All rights reserved.

        - PCR amplify the genomic region targeted by the sgRNA.
        - Analyze the PCR products by Sanger sequencing to identify clones with frameshift-inducing indels.
        - Alternatively, perform a T7 Endonuclease I assay to screen for clones with mutations.
    - Western Blot Analysis:
        - Prepare protein lysates from the putative knockout clones and wild-type control cells.
        - Perform Western blotting using an antibody specific to the target β4GalNAcT protein to confirm the absence of protein expression.[3][4][5]
- Phenotypic Analysis:
    - Once knockout is confirmed, perform relevant phenotypic assays to investigate the functional consequences of gene ablation (e.g., cell migration, invasion, proliferation, or glycosylation analysis).

## Protocol 2: CRISPRi-Mediated Knockdown of a β4GalNAcT Gene

This protocol outlines the steps for achieving transcriptional repression of a target β4GalNAcT gene using a dCas9-KRAB system.

Materials:

- Target mammalian cell line stably expressing dCas9-KRAB
- Lentiviral vector for sgRNA expression (e.g., pLKO5.sgRNA.EFS.tRFP)
- Oligonucleotides for sgRNA cloning (designed to target the promoter or transcriptional start site of the β4GalNAcT gene)
- Lentiviral packaging and envelope plasmids (e.g., psPAX2 and pMD2.G)
- HEK293T cells for lentivirus production

© 2026 BenchChem. All rights reserved.

- Lentivirus concentration reagent (optional)
- Polybrene
- Puromycin or other selection agent
- RNA extraction kit
- cDNA synthesis kit
- Primers for qPCR analysis of β4GalNAcT gene expression

Procedure:

- sgRNA Design and Cloning:
  - Design sgRNAs targeting the region -50 to +300 bp of the transcriptional start site (TSS) of the target β4GalNAcT gene.
  - Clone the designed sgRNAs into the lentiviral sgRNA expression vector.
- Lentivirus Production:
  - Co-transfect HEK293T cells with the sgRNA expression plasmid and the packaging and envelope plasmids.
  - Harvest the lentiviral supernatant 48 and 72 hours post-transfection.
  - Concentrate the lentivirus if necessary.
- Transduction:
  - Plate the dCas9-KRAB expressing target cells.
  - Transduce the cells with the lentivirus containing the sgRNA in the presence of polybrene.
- Selection:

© 2026 BenchChem. All rights reserved.

- 48 hours post-transduction, select for transduced cells using the appropriate antibiotic (e.g., puromycin).

- Validation of Knockdown:
  - Quantitative PCR (qPCR):
    - Extract total RNA from the selected cells and a non-targeting control cell line.
    - Synthesize cDNA.
    - Perform qPCR using primers specific for the target β4GalNAcT gene and a housekeeping gene for normalization.
    - Calculate the percentage of gene knockdown relative to the control.[6]
  - Western Blot Analysis:
    - Confirm the reduction in protein levels by Western blot as described in Protocol 1.

- Phenotypic Analysis:
  - Perform functional assays to assess the phenotypic consequences of β4GalNAcT gene knockdown.

## Conclusion

CRISPR-based technologies offer versatile and precise tools for elucidating the function of β4GalNAcT genes. By employing CRISPR-KO, CRISPRi, and CRISPRa, researchers can effectively dissect the roles of these glycosyltransferases in health and disease, paving the way for the identification of novel therapeutic targets and the development of innovative treatment strategies. The protocols and data presented here provide a comprehensive guide for initiating and conducting these powerful experiments.

***Need Custom Synthesis?***

*BenchChem offers custom synthesis for rare earth carbides and specific isotopiclabeling.*

*Email: info@benchchem.com or Request Quote Online.*

# References


- 1. Identification of β4GALNT2 as an anti-hPIV3 factor through genome-wide CRISPR/Cas9 library screening - PubMed [pubmed.ncbi.nlm.nih.gov]
- 2. Identification of β4GALNT2 as an anti-hPIV3 factor through genome-wide CRISPR/Cas9 library screening - PMC [pmc.ncbi.nlm.nih.gov]
- 3. academic.oup.com [academic.oup.com]
- 4. Frontiers | Multiplex CRISPR/Cas9-mediated editing of seven glycosyltransferase homologs in Nicotiana benthamiana to produce stable, Cas9-free, glycoengineered plants [frontiersin.org]
- 5. academic.oup.com [academic.oup.com]
- 6. CRISPR interference [horizondiscovery.com]

- To cite this document: BenchChem. [Application Notes and Protocols for Studying β4GalNAcT Gene Function Using CRISPR]. BenchChem, [2026]. [Online PDF]. Available at: [https://www.benchchem.com/product/b12845225/docs#application-notes-and-protocols-for-studying-4galnact-gene-function-using-crispr]

---

**Disclaimer & Data Validity:**

The information provided in this document is for Research Use Only (RUO) and is strictly not intended for diagnostic or therapeutic procedures. While BenchChem strives to provide accurate protocols, we make no warranties, express or implied, regarding the fitness of this product for every specific experimental setup.

**Technical Support:**The protocols provided are for reference purposes. Unsure if this reagent suits your experiment?

**Need Industrial/Bulk Grade?** Request Custom Synthesis Quote

# BenchChem

Our mission is to be the trusted global source of essential and advanced chemicals, empowering scientists and researchers to drive progress in science and industry.

Contact

Address: 3281 E Guasti Rd

Ontario, CA 91761, United States

Phone: (601) 213-4426

Email: info@benchchem.com

Contact our Ph.D. Support Team for a compatibility check

© 2026 BenchChem. All rights reserved.