Improving solubility of Boc-Val-Ala for coupling reactions

Author: BenchChem Technical Support Team. **Date**: April 2026

Compound of Interest

Compound Name:	*(tert-Butoxycarbonyl)-L-valyl-L-alanine*
CAS No.:	*70396-18-8*
Cat. No.:	*B1283292*

Get Quote

Technical Support Center: Boc-Val-Ala Coupling Reactions

This technical support center provides troubleshooting guidance and frequently asked questions (FAQs) for researchers, scientists, and drug development professionals encountering solubility issues with Boc-Val-Ala during peptide coupling reactions.

Frequently Asked Questions (FAQs)

Q1: Why is my Boc-Val-Ala poorly soluble in standard coupling reaction solvents?

A1: Boc-Val-Ala is a dipeptide composed of two hydrophobic amino acids, valine and alanine. The bulky, nonpolar side chains of these residues, combined with the hydrophobic Boc protecting group, contribute to its limited solubility in many organic solvents. This inherent hydrophobicity can lead to aggregation and precipitation, especially at higher concentrations.

Q2: What are the most common solvents for dissolving Boc-Val-Ala for coupling reactions?

© 2026 BenchChem. All rights reserved.

A2: The most commonly used solvents are polar aprotic solvents. N,N-Dimethylformamide (DMF) and N-Methyl-2-pyrrolidone (NMP) are generally the most effective due to their excellent solvating properties for protected peptides.[1][2][3] Dichloromethane (DCM) can also be used, but the solubility of Boc-Val-Ala may be lower.[1] For particularly challenging cases, a "magic mixture" of DCM, DMF, and NMP in a 1:1:1 ratio can be employed to enhance solubility.[3]

Q3: Can the choice of coupling reagent affect the solubility of Boc-Val-Ala?

A3: While the coupling reagent itself doesn't directly alter the inherent solubility of Boc-Val-Ala, the reaction conditions and intermediates formed can be influenced. Reagents like HATU and HBTU are often used in polar aprotic solvents like DMF, which are good for dissolving Boc-Val-Ala.[4][5] The formation of an active ester intermediate can sometimes improve overall solution homogeneity during the reaction.

Q4: My Boc-Val-Ala precipitates out of solution during the coupling reaction. What should I do?

A4: Precipitation during the reaction is a clear indication of poor solubility. Please refer to the troubleshooting guide below for a step-by-step approach to address this issue.

Troubleshooting Guide: Improving Boc-Val-Ala Solubility

Problem: Boc-Val-Ala is not dissolving or is precipitating during the coupling reaction.

This guide will walk you through a series of steps to troubleshoot and resolve solubility issues with Boc-Val-Ala in solution-phase peptide coupling reactions.

© 2026 BenchChem. All rights reserved.

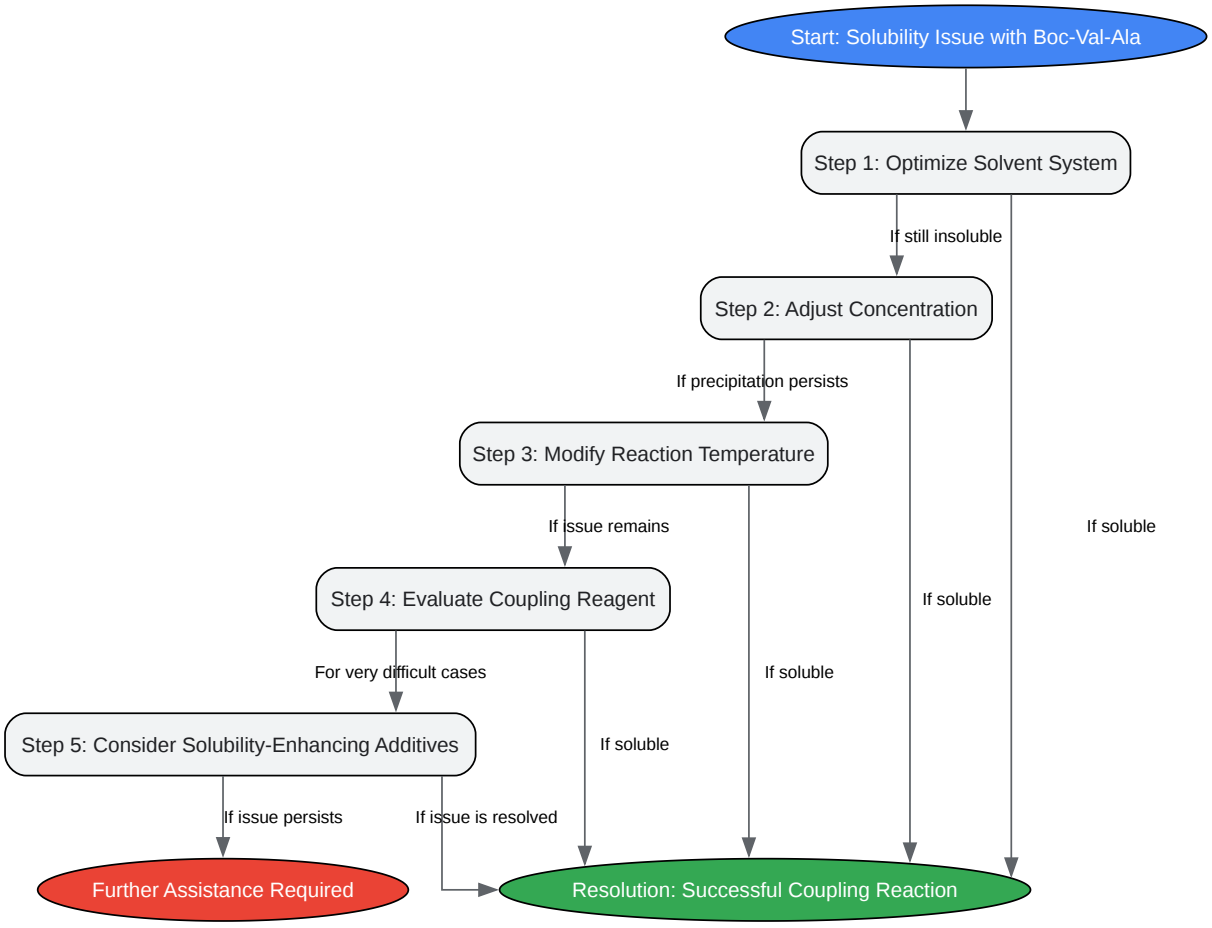

Click to download full resolution via product page

Caption: Troubleshooting workflow for Boc-Val-Ala solubility issues.

Step 1: Optimize the Solvent System

- Initial Choice: Start with DMF or NMP as the primary solvent.[1][2]

© 2026 BenchChem. All rights reserved.

- Solvent Mixtures: If solubility is still an issue, try a binary mixture. A combination of DMF and DCM can be effective. For highly problematic cases, the "magic mixture" (DMF:NMP:DCM, 1:1:1) is a powerful option.[3]

- Alternative Solvents: In some instances, solvents like Dimethyl Sulfoxide (DMSO) or mixtures containing Trifluoroethanol (TFE) or Hexafluoroisopropanol (HFIP) with DCM have been shown to dissolve very insoluble protected peptides.[6]

Step 2: Adjust the Concentration

- Dilution: The simplest approach is to decrease the concentration of your reactants. Halving the concentration can often prevent precipitation.

- Gradual Addition: Instead of adding all the Boc-Val-Ala at once, try adding it portion-wise to the reaction mixture with vigorous stirring.

Step 3: Modify the Reaction Temperature

- Gentle Warming: Gently warming the reaction mixture (e.g., to 30-40°C) can sometimes improve solubility. However, be cautious as elevated temperatures can increase the risk of side reactions, such as racemization, depending on the coupling reagent used. Monitor the reaction closely.

Step 4: Evaluate the Coupling Reagent

- Reagent Choice: While most standard coupling reagents (HBTU, HATU, EDC/HOBt) are compatible with solvents good for Boc-Val-Ala, ensure your chosen reagent is soluble and active in your selected solvent system.[4][5][7]

- Pre-activation: Pre-activating the Boc-Val-Ala with the coupling reagent in a small amount of solvent before adding it to the main reaction mixture can sometimes help maintain solubility.

Step 5: Consider Solubility-Enhancing Additives

- Chaotropic Agents: In very difficult cases, the addition of chaotropic agents like lithium chloride (LiCl) to DMF can disrupt peptide aggregation and improve solubility.

© 2026 BenchChem. All rights reserved.

Quantitative Data: Solvent Guide for Boc-Val-Ala

While precise quantitative solubility data for Boc-Val-Ala is not readily available in the literature, the following table provides a qualitative guide based on the general properties of hydrophobic dipeptides and common practices in peptide synthesis.

© 2026 BenchChem. All rights reserved.

Solvent	Abbreviation	Qualitative Solubility of Boc-Val-Ala	Notes
N,N-Dimethylformamide	DMF	Soluble	A common and effective solvent for peptide coupling.[1][2]
N-Methyl-2-pyrrolidone	NMP	Soluble	Often used for hydrophobic peptides as it can be better at preventing aggregation than DMF.[2][3]
Dichloromethane	DCM	Sparingly Soluble	Solubility is generally lower than in DMF or NMP. Often used in mixtures.[1]
Dimethyl Sulfoxide	DMSO	Soluble	A very polar solvent that can be effective for dissolving difficult peptides.[3]
"Magic Mixture" (DCM:DMF:NMP 1:1:1)	-	Highly Soluble	A powerful solvent system for very hydrophobic and aggregation-prone peptides.[3]
Tetrahydrofuran	THF	Sparingly to Insoluble	Generally not a good solvent for polar or large peptides, but can be used for some solution-phase couplings with smaller, less polar molecules.[8]

© 2026 BenchChem. All rights reserved.

Acetonitrile	ACN	Sparingly to Insoluble	Not typically used as the primary solvent for coupling reactions involving larger peptides due to poor solubility.

Experimental Protocol: Solution-Phase Coupling of Boc-Val-Ala using HBTU

This protocol describes a general procedure for the solution-phase coupling of Boc-Val-Ala to a primary amine (e.g., an amino acid ester).

© 2026 BenchChem. All rights reserved.

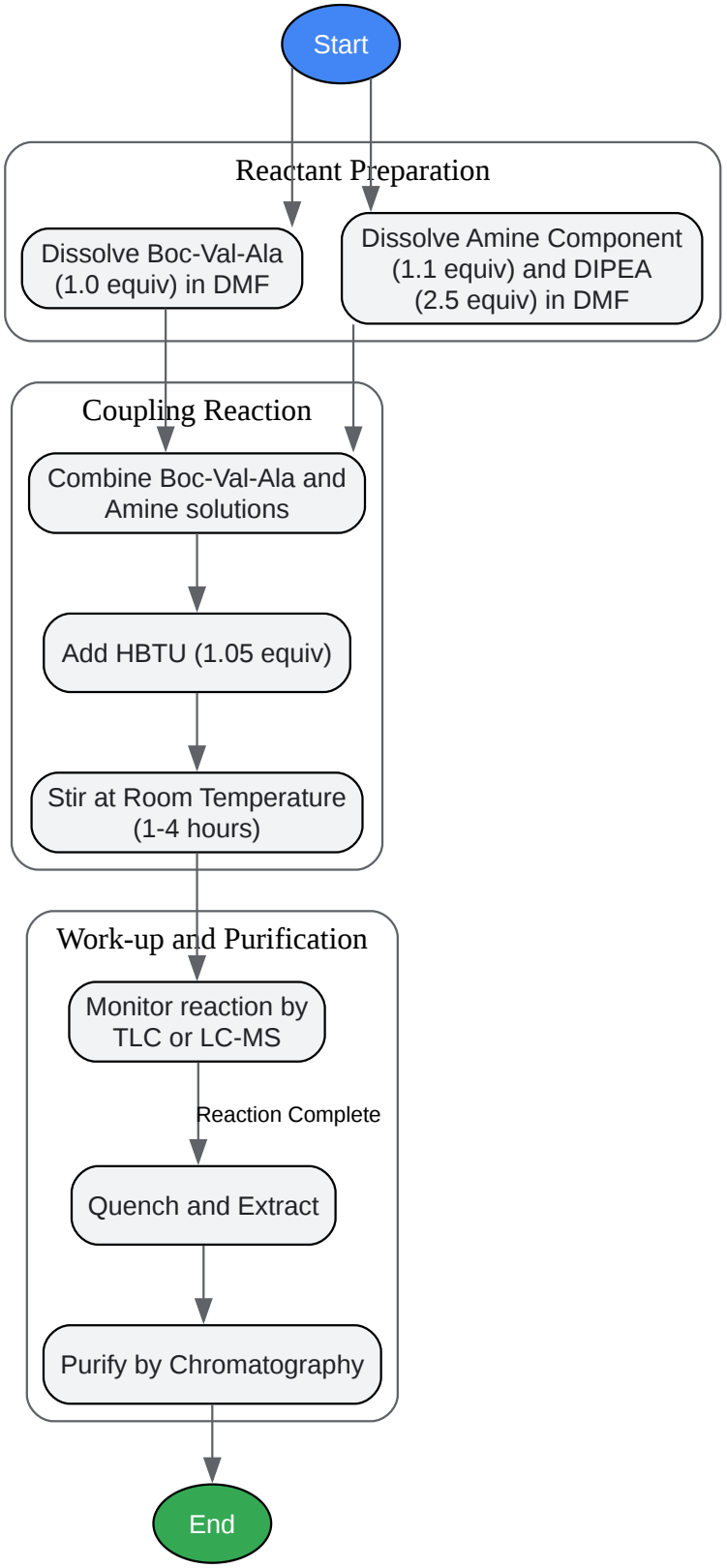

Click to download full resolution via product page

Caption: Experimental workflow for a solution-phase coupling reaction.

© 2026 BenchChem. All rights reserved.

Materials:

- Boc-Val-Ala-OH
- Amine component (e.g., H-Ala-OMe·HCl)
- O-(Benzotriazol-1-yl)-N,N,N',N'-tetramethyluronium hexafluorophosphate (HBTU)
- N,N-Diisopropylethylamine (DIPEA)
- N,N-Dimethylformamide (DMF), anhydrous
- Dichloromethane (DCM)
- Saturated aqueous sodium bicarbonate ($NaHCO_3$) solution
- 1 M aqueous hydrochloric acid (HCl) solution
- Brine (saturated aqueous NaCl solution)
- Anhydrous magnesium sulfate ($MgSO_4$) or sodium sulfate (Na_2SO_4)
- Standard laboratory glassware and stirring equipment

Procedure:

- Dissolution of Amine: In a round-bottom flask, dissolve the amine component (1.1 equivalents, e.g., H-Ala-OMe·HCl) in anhydrous DMF. Add DIPEA (2.5 equivalents) to neutralize the salt and stir for 10 minutes at room temperature.[4]
- Dissolution of Boc-Val-Ala: In a separate flask, dissolve Boc-Val-Ala (1.0 equivalent) in a minimal amount of anhydrous DMF. If solubility is an issue, refer to the troubleshooting guide.
- Combining Reactants: Add the Boc-Val-Ala solution to the flask containing the amine.
- Activation and Coupling: Add HBTU (1.05 equivalents) to the reaction mixture.[4]

© 2026 BenchChem. All rights reserved.

- Reaction Monitoring: Stir the reaction at room temperature and monitor its progress using Thin-Layer Chromatography (TLC) or Liquid Chromatography-Mass Spectrometry (LC-MS). The reaction is typically complete within 1-4 hours.[4]
- Work-up:
  - Once the reaction is complete, dilute the mixture with ethyl acetate or DCM.
  - Wash the organic layer sequentially with 1 M HCl (2x), saturated aqueous $NaHCO_3$ (2x), and brine (1x).
  - Dry the organic layer over anhydrous $MgSO_4$ or Na_2SO_4.
  - Filter and concentrate the solution under reduced pressure to obtain the crude product.
- Purification: Purify the crude dipeptide by flash column chromatography on silica gel using an appropriate solvent system (e.g., a gradient of methanol in dichloromethane or ethyl acetate in hexanes).

Need Custom Synthesis?

BenchChem offers custom synthesis for rare earth carbides and specific isotopiclabeling.

Email: info@benchchem.com or Request Quote Online.

References

- 1. peptide.com [peptide.com]
- 2. biotage.com [biotage.com]
- 3. Challenges and Perspectives in Chemical Synthesis of Highly Hydrophobic Peptides - PMC [pmc.ncbi.nlm.nih.gov]
- 4. benchchem.com [benchchem.com]
- 5. benchchem.com [benchchem.com]
- 6. Powerful solvent systems useful for synthesis of sparingly-soluble peptides in solution - PubMed [pubmed.ncbi.nlm.nih.gov]
- 7. bachem.com [bachem.com]

© 2026 BenchChem. All rights reserved.

- 8. peptide.com [peptide.com]
- To cite this document: BenchChem. [Improving solubility of Boc-Val-Ala for coupling reactions]. BenchChem, [2026]. [Online PDF]. Available at: [https://www.benchchem.com/product/b1283292/docs#improving-solubility-of-boc-val-ala-for-coupling-reactions]

Disclaimer & Data Validity:

The information provided in this document is for Research Use Only (RUO) and is strictly not intended for diagnostic or therapeutic procedures. While BenchChem strives to provide accurate protocols, we make no warranties, express or implied, regarding the fitness of this product for every specific experimental setup.

Technical Support: The protocols provided are for reference purposes. Unsure if this reagent suits your experiment?

Need Industrial/Bulk Grade? Request Custom Synthesis Quote

BenchChem

Our mission is to be the trusted global source of essential and advanced chemicals, empowering scientists and researchers to drive progress in science and industry.

Contact

Address: 3281 E Guasti Rd

Ontario, CA 91761, United States

Phone: (601) 213-4426

Email: info@benchchem.com

Contact our Ph.D. Support Team for a compatibility check