Technical Support Center: 4-Amino-4-methylpentan-1-ol Synthesis

Author: BenchChem Technical Support Team. **Date**: May 2026

Compound of Interest

Compound Name:	*4-Amino-4-methylpentan-1-ol*
CAS No.:	*85054-53-1*
Cat. No.:	*B1282244*

Get Quote

Welcome to the technical support resource for researchers, scientists, and professionals in drug development working with **4-Amino-4-methylpentan-1-ol**. This guide is designed to provide in-depth troubleshooting advice and answers to frequently asked questions regarding the synthesis of this compound, with a particular focus on the identification and mitigation of reaction byproducts. Our approach is grounded in mechanistic principles to empower you to not only solve immediate experimental challenges but also to build a robust and reproducible synthetic process.

Frequently Asked Questions (FAQs) & Troubleshooting Guides

Question 1: My final product of **4-Amino-4-methylpentan-1-ol** shows unexpected impurities in the NMR/LC-MS. What are the most likely byproducts I should be looking for?

Answer:

© 2026 BenchChem. All rights reserved.

When synthesizing **4-Amino-4-methylpentan-1-ol**, particularly through the common route of reducing the precursor 4-methyl-4-nitropentan-1-ol, the most probable byproducts arise from incomplete reaction or subsequent intramolecular side reactions. The primary species to investigate are:

- Incomplete Reduction Intermediates: The reduction of a nitro group to an amine is a stepwise process. If the reaction is not driven to completion, you may isolate stable intermediates.[1]
    - 4-Methyl-4-nitrosopentan-1-ol: The initial reduction product.
    - 4-Hydroxylamino-4-methylpentan-1-ol: The subsequent reduction product before the final amine. The presence of hydroxylamines can be particularly problematic as they can be unstable.[2]
- Intramolecular Cyclization Product: **4-Amino-4-methylpentan-1-ol** possesses both a nucleophilic amine and a terminal alcohol, making it susceptible to intramolecular cyclization, especially under certain thermal or catalytic conditions.[3][4]
    - 3,3-Dimethyl-2-oxa-7-azaspiro[4.4]nonane (potential spirocyclic ether amine via dehydration) or more likely, intramolecular displacement to form a substituted piperidine: Depending on the reaction conditions, direct cyclization via dehydration can occur. The more probable cyclic byproduct, however, is 2,2-dimethylpiperidine-4-methanol if cyclization is favored. Given the structure, a more likely cyclization would be the formation of a six-membered ring, resulting in 4,4-dimethyl-2-piperidinemethanol. However, the most direct cyclization would result in a substituted pyrrolidine. Let's consider the formation of a substituted piperidine as a common cyclization pathway for amino alcohols.[5] A plausible cyclic byproduct is 4,4-dimethylpiperidin-2-ol, formed through intramolecular cyclization.

© 2026 BenchChem. All rights reserved.

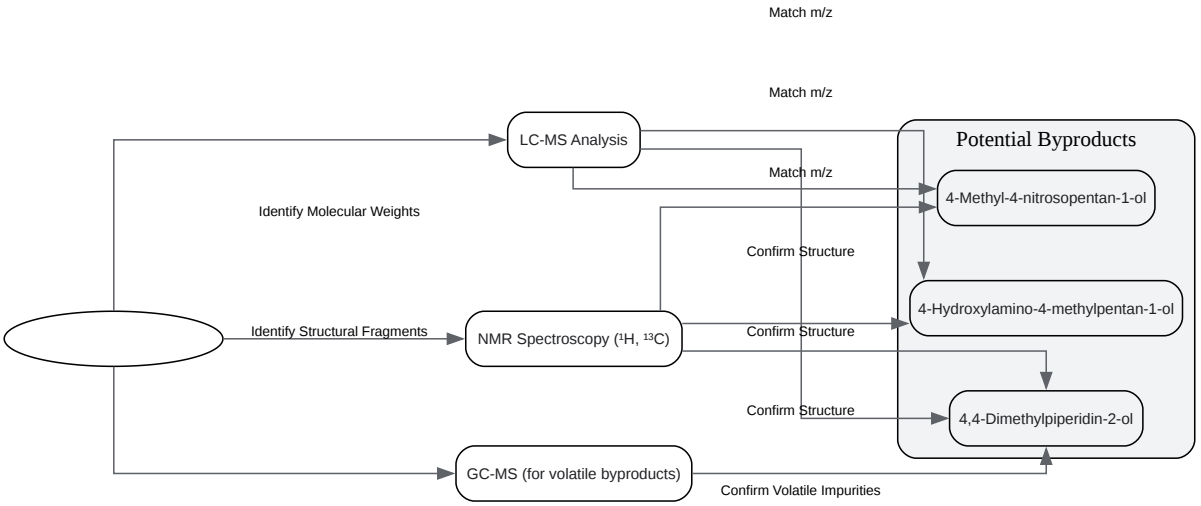

Click to download full resolution via product page

Caption: Byproduct identification workflow.

Question 2: I suspect incomplete reduction is occurring. How can I optimize my reaction to favor the formation of the desired amine?

Answer:

Incomplete reduction is a common issue when converting nitroalkanes to primary amines. The choice of reducing agent and reaction conditions are critical for ensuring the reaction proceeds to completion.[6]

© 2026 BenchChem. All rights reserved.

Parameter	Recommendation	Rationale
Reaction Time	Increase the reaction time and monitor by TLC or LC-MS until the starting material and intermediates are consumed.	The reduction of the nitroso and hydroxylamine intermediates may be slower than the initial reduction of the nitro group.
Catalyst Loading	For catalytic hydrogenations (e.g., Pd/C, Raney Nickel), increase the catalyst loading (e.g., from 5 mol% to 10 mol%).[6]	A higher catalyst loading can increase the reaction rate and help drive the reaction to completion. Ensure proper mixing to avoid mass transfer limitations.
Hydrogen Pressure	For catalytic hydrogenations, increase the hydrogen pressure.	Higher pressure increases the concentration of dissolved hydrogen, which can accelerate the rate of reduction.
Temperature	Gently warming the reaction (e.g., to 40-50 °C) can increase the reaction rate.	Exercise caution, as higher temperatures can sometimes promote side reactions like cyclization.
Choice of Reducing Agent	If using metal/acid reductions (e.g., Fe/HCl), ensure a sufficient excess of the metal is used. For stubborn reductions, consider a more potent reducing system like LiAlH4, but be mindful of its reactivity with other functional groups.[6]	Different reducing agents have varying activities and selectivities. For aliphatic nitro compounds, LiAlH4 is very effective.[1]

- Preparation: In a suitable pressure vessel, dissolve 4-methyl-4-nitropentan-1-ol in a solvent such as methanol or ethanol.

© 2026 BenchChem. All rights reserved.

- Catalyst Addition: Carefully add the hydrogenation catalyst (e.g., 10% Pd/C or Raney Nickel) under an inert atmosphere (e.g., nitrogen or argon).
- Hydrogenation: Seal the vessel, purge with hydrogen gas, and then pressurize to the desired pressure (e.g., 50-100 psi).
- Reaction: Stir the reaction mixture vigorously at room temperature or with gentle warming.
- Monitoring: Monitor the reaction progress by taking aliquots and analyzing them by TLC or LC-MS.
- Work-up: Once the reaction is complete, carefully filter the catalyst. Caution: Palladium on carbon can be pyrophoric when exposed to air after the reaction. The filter cake should be kept wet with solvent. The filtrate can then be concentrated to yield the crude product.

Question 3: I have identified a cyclic byproduct in my product mixture. How can I prevent its formation?

Answer:

The formation of a cyclic byproduct, such as 4,4-dimethylpiperidin-2-ol, from **4-Amino-4-methylpentan-1-ol** is an intramolecular process that is often promoted by elevated temperatures or the presence of certain catalysts.[3][7]

- Temperature Control: Maintain a lower reaction temperature during the synthesis and work-up. If the reduction of the nitro group is exothermic, ensure adequate cooling.
- pH Control: During work-up, avoid strongly acidic or basic conditions for prolonged periods, as these can catalyze cyclization.
- Prompt Work-up and Purification: Once the reaction to form the amino alcohol is complete, proceed with the work-up and purification without delay. Leaving the crude product to stand, especially at elevated temperatures, can increase the amount of the cyclic byproduct.
- Protecting Groups: In cases where cyclization is a significant and unavoidable problem, a protecting group strategy can be employed. For example, the alcohol could be protected as

© 2026 BenchChem. All rights reserved.

a silyl ether prior to the reduction of the nitro group. However, this adds extra steps to the synthesis.

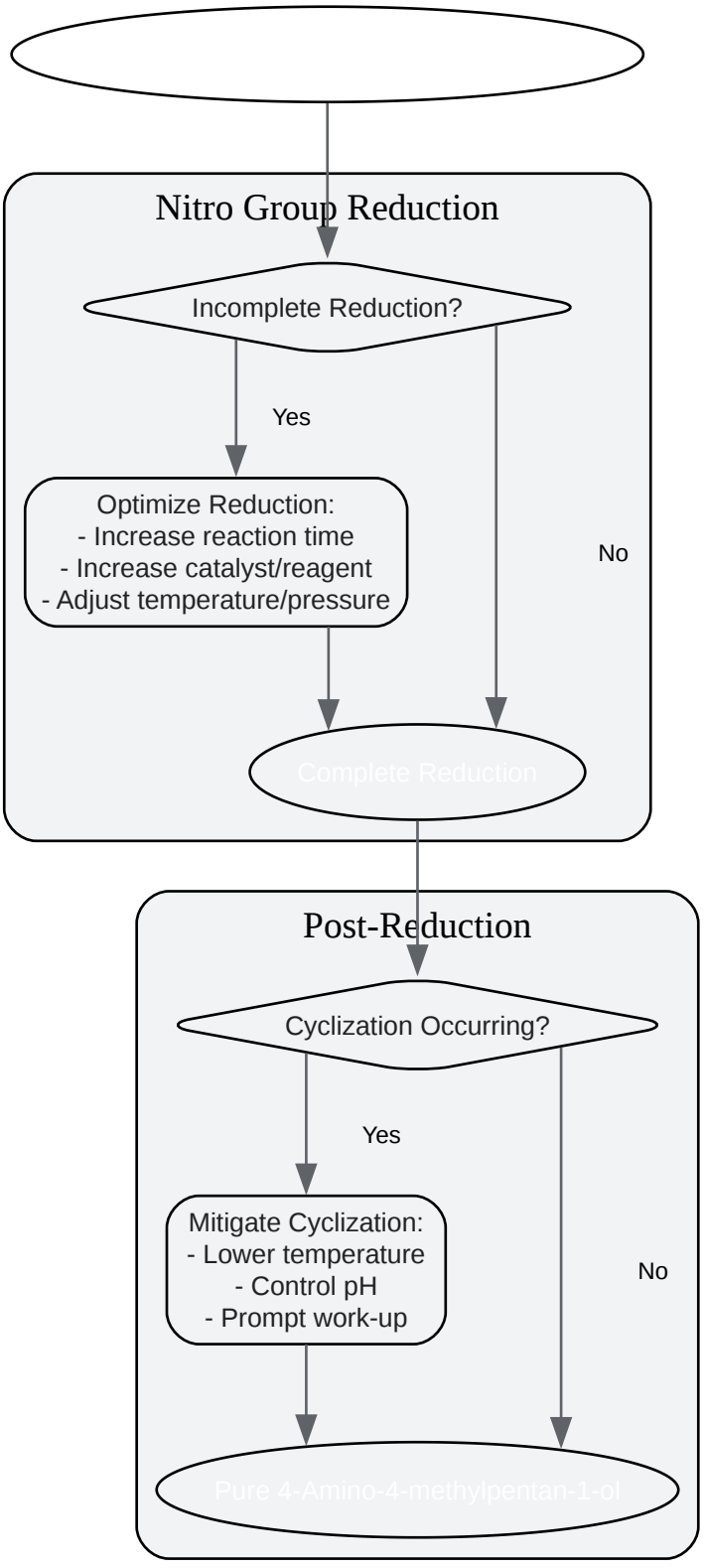

© 2026 BenchChem. All rights reserved.

Click to download full resolution via product page

Caption: Decision-making process for byproduct mitigation.

References

- Organic Chemistry Portal. (n.d.). Amine synthesis by nitro compound reduction. Retrieved from [Link]
- Google Patents. (2022). CN115703750A - Extraction and purification method of 1-amino-4-methylpiperazine.
- Wikipedia. (2023). Reduction of nitro compounds. Retrieved from [Link]
- PubChem. (n.d.). **4-Amino-4-methylpentan-1-ol**. Retrieved from [Link]
- Organic Chemistry Portal. (n.d.). Nitro Reduction - Common Conditions. Retrieved from [Link]
- PubChem. (n.d.). 4-Amino-4-methylpentan-2-ol. Retrieved from [Link]
- Mettler Toledo. (n.d.). Catalytic Hydrogenation of Nitrobenzene to Aniline. Retrieved from [Link]
- Master Organic Chemistry. (2018). More Reactions on the Aromatic Sidechain: Reduction of Nitro Groups and the Baeyer Villiger. Retrieved from [Link]
- Pingen, D., & Vogt, D. (2013). Amino-alcohol cyclization: selective synthesis of lactams and cyclic amines from amino-alcohols. Catalysis Science & Technology, 3(9), 2271-2275. [Link]
- Organic Syntheses. (n.d.). One-Pot Preparation of Cyclic Amines from Amino Alcohols. Retrieved from [Link]
- PubMed Central. (2024). Catalytic Reduction of Aromatic Nitro Compounds to Phenylhydroxylamine and Its Derivatives. Retrieved from [Link]
- Biology LibreTexts. (2022). 18.5: Pathways of Amino Acid Degradation. Retrieved from [Link]

© 2026 BenchChem. All rights reserved.

- The Journal of Organic Chemistry. (2011). N,N'-Carbonyldiimidazole-Mediated Cyclization of Amino Alcohols to Substituted Azetidines and Other N-Heterocycles. Retrieved from [Link]
- ResearchGate. (2013). Amino-alcohol cyclization: Selective synthesis of lactams and cyclic amines from amino-alcohols. Retrieved from [Link]
- Organic Chemistry Portal. (n.d.). O'Donnell Amino Acid Synthesis. Retrieved from [Link]
- NCERT. (n.d.). Amines. Retrieved from [Link]
- Organic Letters. (2010). Oxidative Cyclization of Amino Alcohols Catalyzed by a CpIr Complex. Synthesis of Indoles, 1,2,3,4-Tetrahydroquinolines, and 2,3,4,5-Tetrahydro-1-benzazepine*. Retrieved from [Link]

Need Custom Synthesis?

BenchChem offers custom synthesis for rare earth carbides and specific isotopiclabeling.

Email: info@benchchem.com or Request Quote Online.

Sources

- 1. Reduction of nitro compounds - Wikipedia [en.wikipedia.org]
- 2. mt.com [mt.com]
- 3. Amino-alcohol cyclization: selective synthesis of lactams and cyclic amines from amino-alcohols - Catalysis Science & Technology (RSC Publishing) DOI:10.1039/C3CY00513E [pubs.rsc.org]
- 4. researchgate.net [researchgate.net]
- 5. Organic Syntheses Procedure [orgsyn.org]
- 6. Nitro Reduction - Common Conditions [commonorganicchemistry.com]
- 7. pubs.acs.org [pubs.acs.org]
- To cite this document: BenchChem. [Technical Support Center: 4-Amino-4-methylpentan-1-ol Synthesis]. BenchChem, [2026]. [Online PDF]. Available at: [https://www.benchchem.com/product/b1282244/docs#technical-support-center-4-amino-4-methylpentan-1-ol-synthesis]

© 2026 BenchChem. All rights reserved.

Disclaimer & Data Validity:

The information provided in this document is for Research Use Only (RUO) and is strictly not intended for diagnostic or therapeutic procedures. While BenchChem strives to provide accurate protocols, we make no warranties, express or implied, regarding the fitness of this product for every specific experimental setup.

Technical Support: The protocols provided are for reference purposes. Unsure if this reagent suits your experiment?

Need Industrial/Bulk Grade? Request Custom Synthesis Quote

BenchChem

Our mission is to be the trusted global source of essential and advanced chemicals, empowering scientists and researchers to drive progress in science and industry.

Contact

Address: 3281 E Guasti Rd

Ontario, CA 91761, United States

Phone: (601) 213-4426

Email: info@benchchem.com

Contact our Ph.D. Support Team for a compatibility check

© 2026 BenchChem. All rights reserved.