Crystal structure of 2-Hydroxy-5-nitrobenzamide

Author: BenchChem Technical Support Team. **Date**: May 2026

Compound of Interest

Compound Name:	*2-Hydroxy-5-nitrobenzamide*
CAS No.:	*2912-78-9*
Cat. No.:	*B1280025*

Get Quote

An In-depth Technical Guide to the Crystal Structure of **2-Hydroxy-5-nitrobenzamide**

For Researchers, Scientists, and Drug Development Professionals

Abstract

This technical guide provides a comprehensive analysis of the crystal structure of **2-Hydroxy-5-nitrobenzamide**, an important intermediate in the synthesis of various pharmaceutical compounds. A detailed examination of its three-dimensional atomic arrangement, elucidated by single-crystal X-ray diffraction, is presented. This guide delves into the subtleties of its intramolecular and intermolecular interactions, which are critical for understanding its physicochemical properties and behavior in solid-state formulations. The experimental protocol for crystal structure determination is outlined, offering field-proven insights into the methodological choices. This document serves as an authoritative resource for researchers in crystallography, medicinal chemistry, and pharmaceutical development, providing the foundational knowledge necessary for the rational design of new chemical entities and formulations based on this scaffold.

© 2026 BenchChem. All rights reserved.

Introduction: The Significance of 2-Hydroxy-5-nitrobenzamide

2-Hydroxy-5-nitrobenzamide ($C_7H_6N_2O_4$) is a substituted aromatic compound that serves as a key building block in organic synthesis.[1][2] Its molecular framework, featuring a hydroxyl group, a nitro group, and an amide group on a benzene ring, provides a unique electronic and steric environment, making it a versatile precursor for more complex molecules with potential biological activities.[1][3] The precise knowledge of its three-dimensional structure is paramount for understanding its reactivity, stability, and potential interactions with biological targets. Crystal structure analysis provides definitive insights into bond lengths, bond angles, and, most importantly, the non-covalent interactions that dictate the packing of molecules in the solid state. These packing arrangements can influence crucial material properties such as solubility, dissolution rate, and bioavailability, which are of utmost importance in drug development.

Molecular and Crystal Structure

The crystal structure of **2-Hydroxy-5-nitrobenzamide** was determined by single-crystal X-ray diffraction, revealing a monoclinic crystal system.[4] The fundamental crystallographic data are summarized in the table below.

Table 1: Crystallographic Data for 2-Hydroxy-5-nitrobenzamide

© 2026 BenchChem. All rights reserved.

Parameter	Value
Chemical Formula	$C_7H_6N_2O_4$
Formula Weight	182.14 g/mol [3]
Crystal System	Monoclinic
Space Group	$P2_1/n$
a	5.1803 (3) Å[4]
b	11.1037 (8) Å[4]
c	13.7214 (10) Å[4]
β	100.642 (4)°[4]
Volume	775.69 (9) $Å^3$[4]
Z	4[4]
Temperature	296 K[4]
Radiation	Mo Kα
R-factor	0.037[5]

Data obtained from Raza et al. (2009).[4]

The asymmetric unit contains one molecule of **2-Hydroxy-5-nitrobenzamide**. The benzene ring is planar, with the nitro and amide groups slightly twisted out of this plane.[4][5] The dihedral angle between the nitro group and the benzene ring is 8.49 (13)°, while the dihedral angle between the amide group and the benzene ring is 8.48 (21)°.[5]

Caption: Molecular structure of **2-Hydroxy-5-nitrobenzamide**.

Experimental Methodology: Single-Crystal X-ray Diffraction

The determination of the crystal structure of **2-Hydroxy-5-nitrobenzamide** is achieved through the robust technique of single-crystal X-ray diffraction.[6][7] This method provides unparalleled

© 2026 BenchChem. All rights reserved.

detail about the three-dimensional arrangement of atoms in a crystalline solid.[6][8]

Crystal Growth

The initial and often most critical step is the growth of high-quality single crystals. For organic compounds like **2-Hydroxy-5-nitrobenzamide**, slow evaporation from a suitable solvent is a commonly employed and effective method.[9]

Protocol for Crystal Growth:

- Purity: Ensure the compound is of high purity, as impurities can inhibit crystal growth or lead to poorly ordered crystals.
- Solvent Selection: Choose a solvent in which the compound is moderately soluble.[9] Solvents such as ethanol, methanol, or acetone are good starting points.
- Solution Preparation: Prepare a nearly saturated solution of **2-Hydroxy-5-nitrobenzamide** in the chosen solvent at a slightly elevated temperature to ensure complete dissolution.
- Filtration: Filter the warm solution through a syringe filter to remove any particulate matter that could act as unwanted nucleation sites.
- Crystallization: Transfer the filtered solution to a clean vial, cover it loosely to allow for slow evaporation of the solvent, and leave it in an undisturbed, vibration-free environment.
- Harvesting: Once crystals of suitable size (typically 0.1-0.3 mm in each dimension) have formed, carefully harvest them from the mother liquor.

Data Collection and Structure Solution

The following workflow outlines the process of data collection and structure determination.

© 2026 BenchChem. All rights reserved.

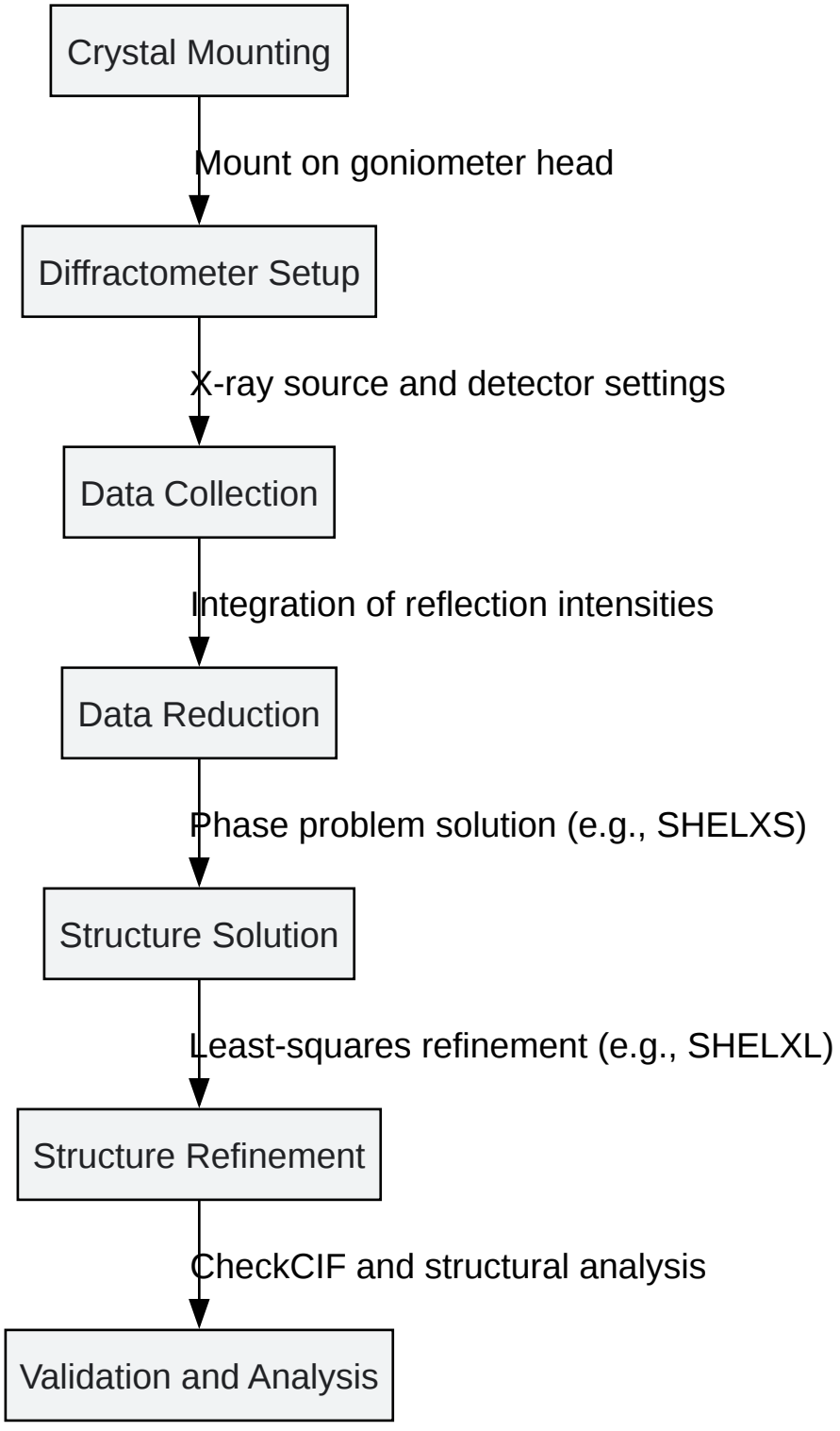

Click to download full resolution via product page

Caption: Workflow for single-crystal X-ray diffraction analysis.

Detailed Steps:

© 2026 BenchChem. All rights reserved.

- Crystal Mounting: A suitable single crystal is selected under a microscope and mounted on a goniometer head.
- Data Collection: The mounted crystal is placed in an X-ray diffractometer (e.g., a Bruker Kappa APEXII CCD).[4] X-rays are directed at the crystal, and the diffraction pattern is recorded as the crystal is rotated.[6]
- Data Reduction: The collected diffraction data are processed to correct for experimental factors and to obtain a set of unique reflection intensities.
- Structure Solution: The phase problem is solved using direct methods or Patterson methods to obtain an initial model of the crystal structure.[4]
- Structure Refinement: The initial model is refined using a least-squares method to improve the agreement between the observed and calculated structure factors.[4][5]
- Validation: The final structure is validated using tools like PLATON and checkCIF to ensure its chemical and crystallographic reasonability.[4]

Analysis of Inter- and Intramolecular Interactions

The crystal packing of **2-Hydroxy-5-nitrobenzamide** is stabilized by a network of hydrogen bonds.

Intramolecular Hydrogen Bonding

A significant feature of the molecular structure is an intramolecular O—H···O hydrogen bond between the hydroxyl group and the carbonyl oxygen of the amide group.[4][5] This interaction forms a stable six-membered ring, denoted as an S(6) ring motif.[4][5] This intramolecular hydrogen bond plays a crucial role in locking the conformation of the molecule.

Intermolecular Hydrogen Bonding and Crystal Packing

In the crystal lattice, molecules of **2-Hydroxy-5-nitrobenzamide** form inversion dimers through pairs of N—H···O hydrogen bonds between the amide groups of adjacent molecules.[4][5] These dimers are further linked by weak C—H···O interactions, creating polymeric sheets that extend along the (100) plane.[4][5] The hydrogen bonding geometry is detailed in the table below.

© 2026 BenchChem. All rights reserved.

Table 2: Hydrogen-Bond Geometry (Å, °)

D—H···A	d(D—H)	d(H···A)	d(D···A)	∠(DHA)
O1—H1···O2	0.82	1.79	2.5196 (16)	148
N1—H1A···O4^{i}	0.86	2.12	2.9698 (17)	170
N1—H1B···O2^{ii}	0.86	2.11	2.9554 (17)	167

Symmetry codes: (i) -x+1/2, y+1/2, -z+3/2; (ii) -x+1, -y+1, -z+2. Data obtained from Raza et al. (2009).[5]

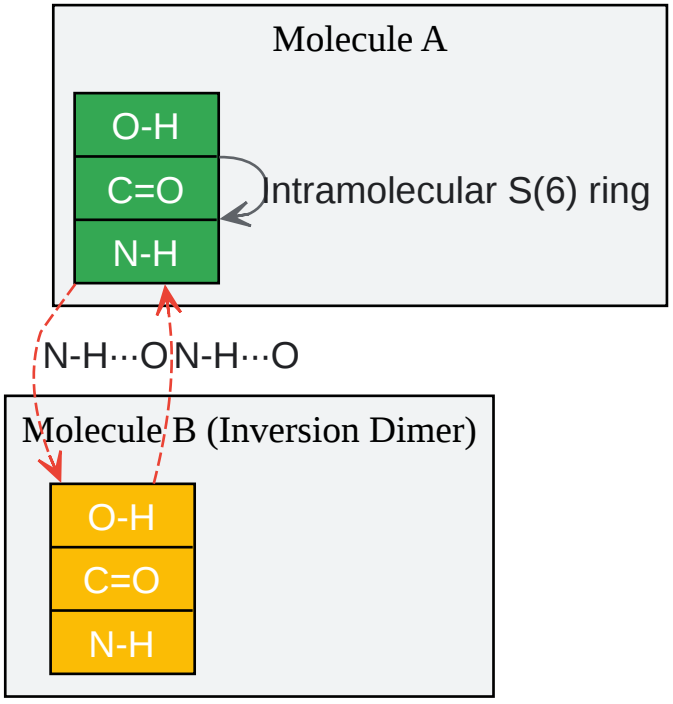

Click to download full resolution via product page

Caption: Schematic of hydrogen bonding in **2-Hydroxy-5-nitrobenzamide**.

Conclusion

The crystal structure of **2-Hydroxy-5-nitrobenzamide** reveals a well-defined arrangement of molecules governed by a robust network of intra- and intermolecular hydrogen bonds. The detailed structural information presented in this guide is fundamental for understanding the

© 2026 BenchChem. All rights reserved.

solid-state properties of this compound. For drug development professionals, this knowledge is critical for formulation design, polymorphism screening, and predicting the stability and bioavailability of active pharmaceutical ingredients derived from this important chemical intermediate. The provided experimental protocols offer a validated framework for the crystallographic analysis of similar organic compounds, ensuring the generation of high-quality, reliable structural data.

References

- Raza, A. R., Tahir, M. N., Nisar, B., Danish, M., & Iqbal, M. S. (2009). **2-Hydroxy-5-nitrobenzamide**. Acta Crystallographica Section E: Structure Reports Online, 65(12), o3260. [Link]
- PubChem. (n.d.). **2-Hydroxy-5-nitrobenzamide**. National Center for Biotechnology Information. Retrieved January 7, 2024, from [Link]
- Creative Biostructure. (n.d.). What Is Single-Crystal X-ray Diffraction (XRD) and How Does It Work? Retrieved January 7, 2024, from [Link]
- Raza, A. R., Tahir, M. N., Nisar, B., Danish, M., & Iqbal, M. S. (2009). **2-Hydroxy-5-Nitrobenzamide**. Acta Crystallographica Section E Structure Reports Online. [Link]
- Raza, A. R., Tahir, M. N., Nisar, B., Danish, M., & Iqbal, M. S. (2015). **2-Hydroxy-5-nitrobenzamide**. ResearchGate. [Link]
- PubChemLite. (n.d.). **2-hydroxy-5-nitrobenzamide** (C7H6N2O4). Retrieved January 7, 2024, from [Link]
- ResearchGate. (2016). How do organic compounds single crystal X rays diffraction work? Retrieved January 7, 2024, from [Link]
- University of Rochester, Department of Chemistry. (n.d.). How To: Grow X-Ray Quality Crystals. Retrieved January 7, 2024, from [Link]
- Carleton College, Science Education Resource Center. (2007). Single-crystal X-ray Diffraction. Retrieved January 7, 2024, from [Link]

© 2026 BenchChem. All rights reserved.

- Sciforum. (n.d.). Optimisation of reaction conditions for the preparation of 2-hydroxy-5-nitrobenzoic acid (2). Retrieved January 7, 2024, from [Link]
- NINGBO INNO PHARMCHEM CO.,LTD. (2025). 2-Hydroxy-5-nitrobenzoic Acid: Comprehensive Overview and Applications. Retrieved January 7, 2024, from [Link]
- ResearchGate. (n.d.). Synthesis of nitrobenzamide derivatives (2, 3, 5 and 6) by reaction of... Retrieved January 7, 2024, from [Link]
- Matrix Fine Chemicals. (n.d.). **2-HYDROXY-5-NITROBENZAMIDE** | CAS 2912-78-9. Retrieved January 7, 2024, from [Link]
- Valsynthese SA. (2022). Material Safety Data Sheet 2-Hydroxy-5-nitrobenzaldehyde. Retrieved January 7, 2024, from [Link]

Need Custom Synthesis?

BenchChem offers custom synthesis for rare earth carbides and specific isotopiclabeling.

Email: info@benchchem.com or Request Quote Online.

Sources

- 1. pdf.benchchem.com [pdf.benchchem.com]
- 2. researchgate.net [researchgate.net]
- 3. 2-Hydroxy-5-nitrobenzamide | C7H6N2O4 | CID 12325176 - PubChem [pubchem.ncbi.nlm.nih.gov]
- 4. 2-Hydroxy-5-nitrobenzamide - PMC [pmc.ncbi.nlm.nih.gov]
- 5. researchgate.net [researchgate.net]
- 6. creative-biostructure.com [creative-biostructure.com]
- 7. rigaku.com [rigaku.com]
- 8. Single-crystal X-ray Diffraction [serc.carleton.edu]
- 9. How To [chem.rochester.edu]

- To cite this document: BenchChem. [Crystal structure of 2-Hydroxy-5-nitrobenzamide]. BenchChem, [2026]. [Online PDF]. Available at:

[https://www.benchchem.com/product/b1280025/docs#crystal-structure-of-2-hydroxy-5-nitrobenzamide]

Disclaimer & Data Validity:

The information provided in this document is for Research Use Only (RUO) and is strictly not intended for diagnostic or therapeutic procedures. While BenchChem strives to provide accurate protocols, we make no warranties, express or implied, regarding the fitness of this product for every specific experimental setup.

Technical Support: The protocols provided are for reference purposes. Unsure if this reagent suits your experiment?

Need Industrial/Bulk Grade? Request Custom Synthesis Quote

BenchChem

Our mission is to be the trusted global source of essential and advanced chemicals, empowering scientists and researchers to drive progress in science and industry.

Contact

Address: 3281 E Guasti Rd

Ontario, CA 91761, United States

Phone: (601) 213-4426

Email: info@benchchem.com

Contact our Ph.D. Support Team for a compatibility check

© 2026 BenchChem. All rights reserved.