Technical Support Center: SARS-CoV-2 Protease Screening Optimization

Author: BenchChem Technical Support Team. **Date**: March 2026

Compound of Interest		
Compound Name:	*DABCYL-Gly-Leu-Arg-Thr-Gln-Ser-Phe-Ser-EDANS*	
CAS No.:	*145682-87-7*	
Cat. No.:	*B128596*	*Get Quote*

Introduction: The Signal-to-Noise Battlefield

Welcome to the Technical Support Center. If you are screening small molecule libraries against SARS-CoV-2 Main Protease (Mpro/3CLpro) or Papain-like Protease (PLpro), you are likely fighting the "Ghost Signals"—false positives caused by compound autofluorescence, quenching, or aggregation.

In high-throughput screening (HTS), a Z-factor > 0.5 is the gold standard. However, standard blue-shifted substrates (e.g., Dabcyl/EDANS) often overlap with the spectral properties of library compounds, particularly natural products and heterocycles. This guide provides the protocols to strip away this noise and validate your hits.

Module 1: Optical Interference (The "Ghost" Signals)

Issue 1: "My inhibition data correlates perfectly with the color of my compounds."

Diagnosis: Inner Filter Effect (IFE). Your compound isn't inhibiting the enzyme; it is absorbing the excitation light (Primary IFE) or the emission light (Secondary IFE). This looks like inhibition because the detector sees less light.

© 2026 BenchChem. All rights reserved.

The Fix: Absorbance-Based Correction You must mathematically correct fluorescence data using absorbance data collected from the same wells.

Protocol: The IFE Correction Workflow

- Dual-Read Setup: Configure your plate reader to read Fluorescence (

) AND Absorbance (OD) at the excitation (

) and emission (

) wavelengths.

- Pathlength Correction: Ensure your OD values are pathlength-corrected to 1 cm (most readers do this automatically if volume is specified).

- Apply the Lakowicz Equation: Calculate the corrected fluorescence (

) using the following formula:

  - : Observed Fluorescence
  - : Absorbance at excitation wavelength[1]
  - : Absorbance at emission wavelength[1]

> *Scientist's Note: If the total Absorbance (*
>
>) > 0.3, the correction becomes non-linear and unreliable. In this case, you must dilute the compound or switch to a red-shifted assay (See Module 3).

Issue 2: "I have 'negative inhibition' (signal higher than control) in some wells."

© 2026 BenchChem. All rights reserved.

Diagnosis: Compound Autofluorescence. Many drug-like molecules (coumarins, quinolines) fluoresce in the UV/Blue range (340–450 nm), masking the enzymatic signal.

The Fix: Kinetic Gating (Slope Analysis) Never rely on Endpoint readings for library screening.

Protocol: Kinetic Slope Extraction

- Measure continuously: Read the plate every 60–90 seconds for 30–60 minutes.
- Linear Region Selection: Identify the linear phase of the reaction (typically minutes 5–20, after the "lag" phase and before substrate depletion).
- Calculate Slope (

  ):
  - Plot RFU vs. Time.
  - The slope (

) represents enzymatic activity.
  - Why this works: A fluorescent compound adds a constant offset (intercept) to the signal but does not change the rate (slope) of substrate cleavage, effectively subtracting the background.

Module 2: Reagent Chemistry & Stability

Issue 3: "My signal degrades over time, even in the positive control."

Diagnosis: Reagent Instability (DTT Oxidation). SARS-CoV-2 proteases require a reducing environment to keep their active site cysteine (Cys145 for Mpro) reduced. DTT oxidizes rapidly, forming cyclic disulfides that can absorb UV light and reduce assay sensitivity.

The Fix: Switch to TCEP Tris(2-carboxyethyl)phosphine (TCEP) is more stable than DTT at physiological pH and does not oxidize into UV-absorbing byproducts.

Comparative Data: Reducing Agents

© 2026 BenchChem. All rights reserved.

Feature	DTT (Dithiothreitol)	TCEP (Tris(2-carboxyethyl)phosphine)
Stability (pH 7.5)	Low (< 4 hours)	High (> 24 hours)
Odor	Strong (Rotten egg)	Odorless
Interference	Oxidized form absorbs at 280nm	Minimal UV absorbance
Red-Shift Risk	Low	High (Can quench Cyanine/Rhodamine dyes)

> *Critical Warning: While TCEP is superior for enzyme stability, it can quench certain red fluorophores (like Cyanine dyes). Always run a "Buffer + Substrate + TCEP" control to check for fluorescence quenching before full deployment.*

Module 3: Advanced Assay Design (Red-Shifting)

Issue 4: "I cannot eliminate background noise with standard substrates."

Diagnosis: Spectral Overlap. The standard substrate (Dabcyl-KTSAVLQSGFRKME-EDANS) excites at ~340 nm. This is the "trash frequency" where plastic plates, dust, and organic molecules fluoresce.

The Fix: Red-Shifted FRET Substrates Move your assay window to the orange/red spectrum (Ex > 500 nm), where interference is negligible.

Recommended Substrate Architectures:

- Rhodamine 110 (R110): Ex 490 nm / Em 520 nm. (Green/Yellow)

© 2026 BenchChem. All rights reserved.

- Pros: High quantum yield, widely available.
- Cons: Still some overlap with yellow compounds.

- CAL Fluor Red 610 / BHQ-1: Ex 590 nm / Em 610 nm. (Red)[2]
  - Pros: virtually zero compound interference.
  - Cons: Requires sensitive red-detector PMT.

Visualizing the Strategy:

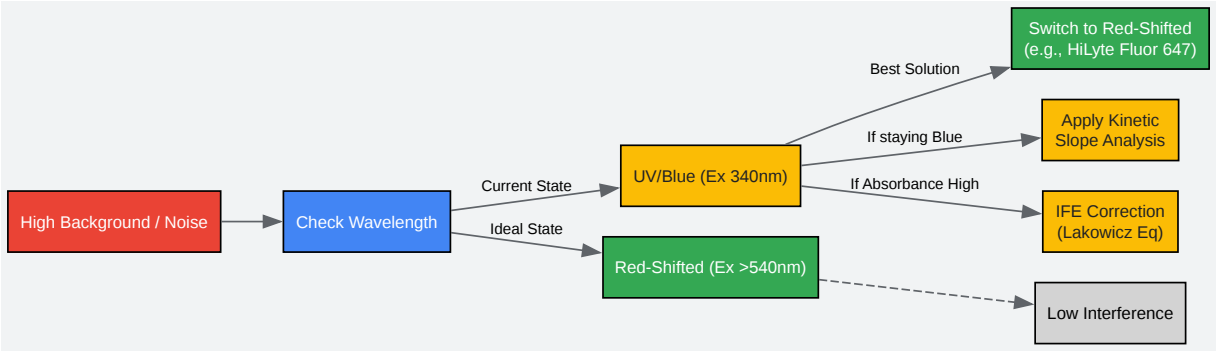

Click to download full resolution via product page

Caption: Decision tree for mitigating background noise. Switching to red-shifted dyes is the most effective physical solution, while kinetic analysis and IFE correction are computational mitigations for blue dyes.

Module 4: Physical Aggregation (The "PAINS" Trap)

Issue 5: "My hit is promiscuous; it inhibits Mpro, PLpro, and my counter-screen."

Diagnosis: Colloidal Aggregation. Lipophilic compounds can form microscopic "oil droplets" (colloids) that sequester the enzyme, causing non-specific inhibition. These are often termed PAINS (Pan-Assay Interference Compounds).[3]

© 2026 BenchChem. All rights reserved.

The Fix: Detergent Stress Test True inhibitors bind 1:1. Aggregators rely on the colloid surface. Detergents break colloids.

Protocol: The Triton Sensitivity Test

- Standard Screen: Run assay with 0.005% Tween-20 (Standard).
- Stress Screen: Run the same "hits" with 0.01% or 0.1% Triton X-100.
- Analysis:
  - True Hit:

    remains constant regardless of detergent.
  - Aggregator: Inhibition disappears (IC50 shoots up) in high detergent.

Summary of Optimization Parameters

Parameter	Standard / Problematic	Optimized / Recommended
Excitation Wavelength	340 nm (UV)	490 nm (Green) or 590 nm (Red)
Read Mode	Endpoint	Kinetic (Slope)
Reducing Agent	DTT (1–5 mM)	TCEP (0.5–1 mM)
Detergent	None	0.01% Triton X-100 or Tween-20
Plate Type	Clear Bottom	Solid Black (Low Binding)

References

- Zhang, L. et al. (2020).[4] Crystal structure of SARS-CoV-2 main protease provides a basis for design of improved

  -ketoamide inhibitors. Science. Link

© 2026 BenchChem. All rights reserved.

- Ma, C. et al. (2020). Boceprevir, GC376, and calpain inhibitors II, XII inhibit SARS-CoV-2 viral replication by targeting the viral main protease. Cell Research. Link
- Lakowicz, J. R. (2006). Principles of Fluorescence Spectroscopy. Correcting for the Inner Filter Effect (Chapter 2). Link
- Kuo, C. J. et al. (2004). Kinetic characterization of the SARS coronavirus main protease. Biochemical and Biophysical Research Communications. (Demonstrates pH and buffer dependencies). Link
- Getz, E. B. et al. (1999). A comparison between the sulfhydryl reductants Tris(2-carboxyethyl)phosphine and dithiothreitol for use in protein biochemistry. Analytical Biochemistry. Link

Need Custom Synthesis?

BenchChem offers custom synthesis for rare earth carbides and specific isotopiclabeling.

Email: info@benchchem.com or Request Quote Online.

Sources

- 1. pdf.benchchem.com [pdf.benchchem.com]
- 2. Development of a red-shifted fluorescence-based assay for SARS-coronavirus 3CL protease: identification of a novel class of anti-SARS agents from the tropical marine sponge Axinella corrugata - PubMed [pubmed.ncbi.nlm.nih.gov]
- 3. researchgate.net [researchgate.net]
- 4. SARS-CoV-2 Main Protease Substrate - Biosyntan GmbH [biosyntan.de]
- To cite this document: BenchChem. [Technical Support Center: SARS-CoV-2 Protease Screening Optimization]. BenchChem, [2026]. [Online PDF]. Available at: [https://www.benchchem.com/product/b128596#minimizing-background-fluorescence-in-sars-cov-protease-screening]

Disclaimer & Data Validity:

© 2026 BenchChem. All rights reserved.

The information provided in this document is for Research Use Only (RUO) and is strictly not intended for diagnostic or therapeutic procedures. While BenchChem strives to provide accurate protocols, we make no warranties, express or implied, regarding the fitness of this product for every specific experimental setup.

Technical Support: The protocols provided are for reference purposes. Unsure if this reagent suits your experiment? [Contact our Ph.D. Support Team for a compatibility check]

Need Industrial/Bulk Grade? Request Custom Synthesis Quote

BenchChem

Our mission is to be the trusted global source of essential and advanced chemicals, empowering scientists and researchers to drive progress in science and industry.

Contact

Address: 3281 E Guasti Rd

Ontario, CA 91761, United States

Phone: (601) 213-4426

Email: info@benchchem.com

© 2026 BenchChem. All rights reserved.