Synthesis of 2-Aryl-Substituted Pyridines: An Application Note and Protocol Guide

Author: BenchChem Technical Support Team. **Date**: May 2026

Compound of Interest

Compound Name:	*2-Benzyloxy-5-bromopyridine*
CAS No.:	*83664-33-9*
Cat. No.:	*B1278972*

Get Quote

For Researchers, Scientists, and Drug Development Professionals

This document provides a detailed guide to the synthesis of 2-aryl-substituted pyridines, a crucial structural motif in pharmaceuticals, functional materials, and organometallic chemistry.[1] This guide covers several powerful and versatile synthetic methods, including the Kröhnke Pyridine Synthesis and various palladium-catalyzed cross-coupling reactions such as the Suzuki-Miyaura, Stille, and Negishi couplings. Detailed experimental protocols, quantitative data summaries, and visualizations are provided to facilitate practical application in a laboratory setting.

Introduction

2-Arylpyridine derivatives are essential scaffolds in the development of organometallic complexes for catalysis and materials science.[1] For instance, the highly phosphorescent bis-cyclometalated iridium complex, FIrPic, which contains two 2-(2,4-difluorophenyl)pyridine ligands, is utilized in the manufacturing of organic light-emitting diodes (OLEDs).[1] Furthermore, the 2-arylpyridine unit is a common structural element in a variety of pharmaceutical drugs, such as the antimalarial agent enpiroline.[1]

© 2026 BenchChem. All rights reserved.

Traditionally, the synthesis of 2-arylpyridines has been achieved through the cross-coupling of 2-halopyridines with aryl pseudohalides using palladium catalysts, or from the reaction of metalated pyridines with aryl pseudohalides.[1] Among these methods, the use of 2-(tributylstannyl)pyridine has been a prevalent, albeit hazardous, starting material.[1] This guide explores more recent and diverse synthetic strategies that offer improvements in efficiency, safety, and substrate scope.

Synthetic Methodologies

A variety of synthetic methods are available for the preparation of 2-aryl-substituted pyridines. The choice of method often depends on the availability of starting materials, desired substitution patterns, and functional group tolerance.

Kröhnke Pyridine Synthesis

The Kröhnke pyridine synthesis is a classical and versatile method for preparing highly functionalized pyridines.[2][3] The reaction typically involves the condensation of an α-pyridinium methyl ketone salt with an α,β-unsaturated carbonyl compound in the presence of an ammonia source, such as ammonium acetate, to yield 2,4,6-trisubstituted pyridines.[3]

General Reaction Scheme:

The synthesis begins with the reaction of an α-pyridinium methyl ketone salt with an α,β-unsaturated ketone, which undergoes a Michael addition. The resulting 1,5-dicarbonyl intermediate then cyclizes with ammonia to form the pyridine ring after dehydration.[2][3]

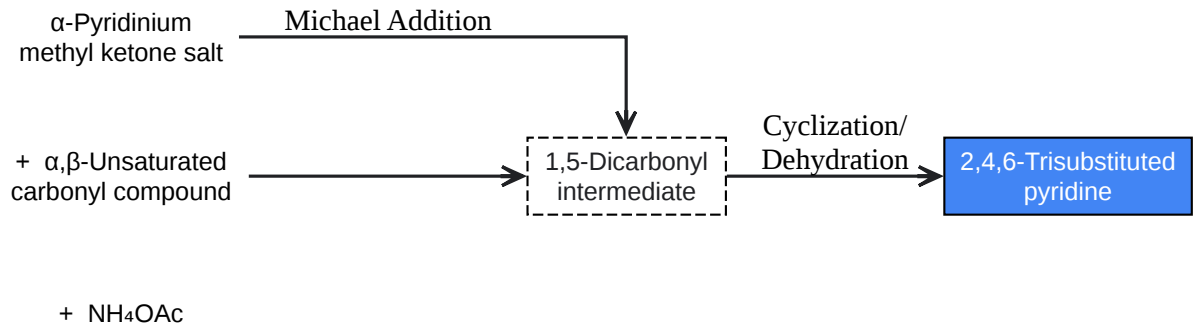

© 2026 BenchChem. All rights reserved.

Click to download full resolution via product page

Caption: General workflow of the Kröhnke Pyridine Synthesis.

Experimental Protocol: Synthesis of 2,4,6-Triphenylpyridine[3]

- Preparation of N-phenacylpyridinium bromide:
  - Dissolve α-bromoacetophenone in acetone.
  - Add pyridine dropwise with stirring at room temperature.
  - Stir for 1-2 hours to allow for precipitate formation.
  - Collect the solid product by vacuum filtration, wash with cold acetone, and dry under vacuum.[3]
- Kröhnke Reaction:
  - In a round-bottom flask, combine N-phenacylpyridinium bromide, chalcone, and a large excess of ammonium acetate.
  - Add glacial acetic acid as the solvent.
  - Heat the mixture to reflux (approximately 120 °C) for 4-6 hours, monitoring by TLC.
  - After cooling, pour the mixture into ice water to precipitate the product.
  - Collect the solid by vacuum filtration and wash with water and cold ethanol.
  - Purify the crude product by recrystallization.

Palladium-Catalyzed Cross-Coupling Reactions

Palladium-catalyzed cross-coupling reactions are powerful tools for forming C-C bonds and are widely used for the synthesis of 2-arylpyridines.

The Suzuki-Miyaura coupling involves the reaction of an organoboron compound (boronic acid or ester) with an organic halide or triflate, catalyzed by a palladium(0) complex.[4] This method

© 2026 BenchChem. All rights reserved.

is popular due to the mild reaction conditions and the commercial availability and stability of boronic acids.

General Reaction Scheme:

The catalytic cycle involves the oxidative addition of the palladium catalyst to the organic halide, followed by transmetalation with the organoboron species and reductive elimination to yield the coupled product and regenerate the catalyst.

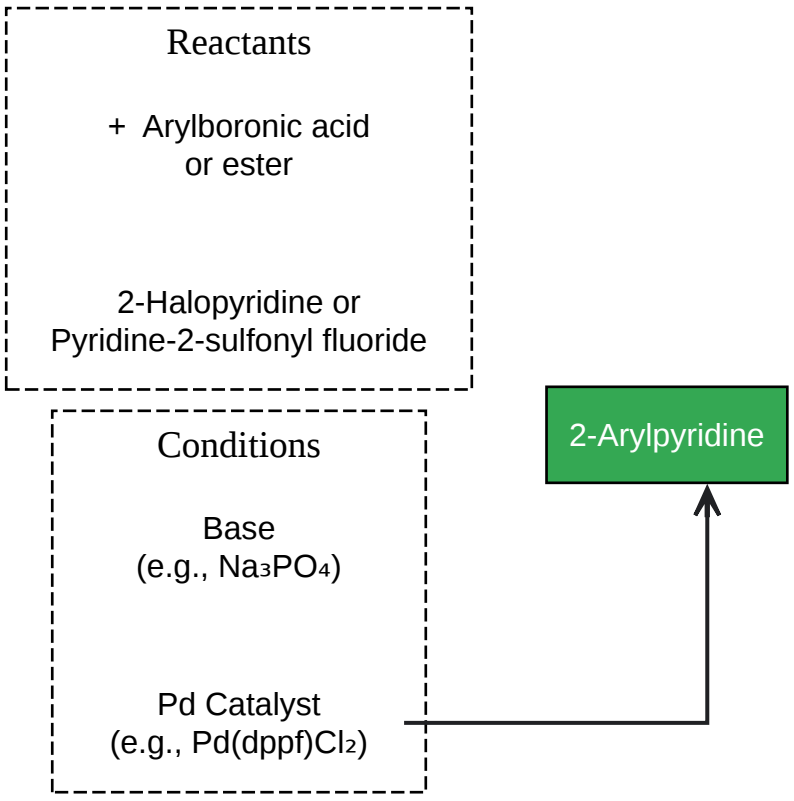

Click to download full resolution via product page

Caption: Key components of the Suzuki-Miyaura cross-coupling reaction.

Experimental Protocol: Synthesis of 2-Arylpyridines using PyFluor[4][5][6]

This protocol describes the Suzuki-Miyaura cross-coupling of pyridine-2-sulfonyl fluoride (PyFluor) with hetero(aryl) boronic acids or esters.[4][7]

- Reaction Setup:

© 2026 BenchChem. All rights reserved.

- In a capped 1-dram vial, combine PyFluor (0.3 mmol), the arylboronic acid or ester (0.45 mmol), $Pd(dppf)Cl_2$ (0.03 mmol), and Na_3PO_4 (0.9 mmol).[4][5]
- Add dioxane (0.8 mL) and water (0.2 mL) as the solvent.[4][5]

- Reaction Conditions:
  - Heat the reaction mixture at a temperature between 65-100 °C.[4][6][7]
  - The reaction can be performed in the presence of water and oxygen.[4][7]
- Work-up and Analysis:
  - Yields can be determined by ^1H NMR using an internal standard such as 1,3,5-trimethoxybenzene.[4]

Quantitative Data Summary: Suzuki-Miyaura Coupling of PyFluor[4]

Entry	Arylboronic Ester/Acid	Yield (%)
1	2-Thiopheneboronic acid pinacol ester	89
2	3-Thiopheneboronic acid pinacol ester	75
3	Phenylboronic acid	68
4	4-Methylphenylboronic acid	72
5	4-Methoxyphenylboronic acid	55

Reaction conditions: PyFluor (0.3 mmol), boronic acid derivative (0.45 mmol), $Pd(dppf)Cl_2$ (0.03 mmol), Na_3PO_4 (0.9 mmol), dioxane/H_2O (4:1), 100 °C.

The Stille coupling utilizes an organotin compound (stannane) as the nucleophilic partner.[8][9] A key advantage is the stability of organostannanes to air and moisture.[10][11] However, the toxicity of tin compounds is a significant drawback.[8][9][11]

General Reaction Scheme:

© 2026 BenchChem. All rights reserved.

The mechanism is similar to the Suzuki coupling, involving oxidative addition, transmetalation, and reductive elimination.[8][11]

Experimental Protocol: General Procedure for Stille Coupling[8]

- Reaction Setup:
  - To a flame-dried round-bottom flask, add the organic halide (1 eq), CuI (0.1 eq), $Pd(dppf)Cl_2$·DCM (0.1 eq), and LiCl (5.3 eq) in DMF.[8]
  - Purge the flask with an inert gas (e.g., Argon) for 10 minutes.[8]
- Addition of Stannane:
  - Add the organotin reagent (1.15 eq) to the reaction mixture.[8]
- Reaction Conditions:
  - Heat the solution to 40 °C for the required reaction time (can be up to 2.5 days).[8]
- Work-up:
  - Transfer the cooled reaction mixture to a separatory funnel containing an aqueous ammonia solution and extract with an organic solvent (e.g., hexane).[8]
  - Wash the combined organic layers with brine, dry over Na_2SO_4, and concentrate in vacuo.[8]
  - Purify the crude product by flash chromatography.[8]

The Negishi coupling involves the reaction of an organozinc reagent with an organic halide or triflate, catalyzed by a palladium or nickel complex.[12][13][14] This method is known for its high functional group tolerance and reactivity.[15]

General Reaction Scheme:

The catalytic cycle follows the standard cross-coupling pathway.[15][16]

© 2026 BenchChem. All rights reserved.

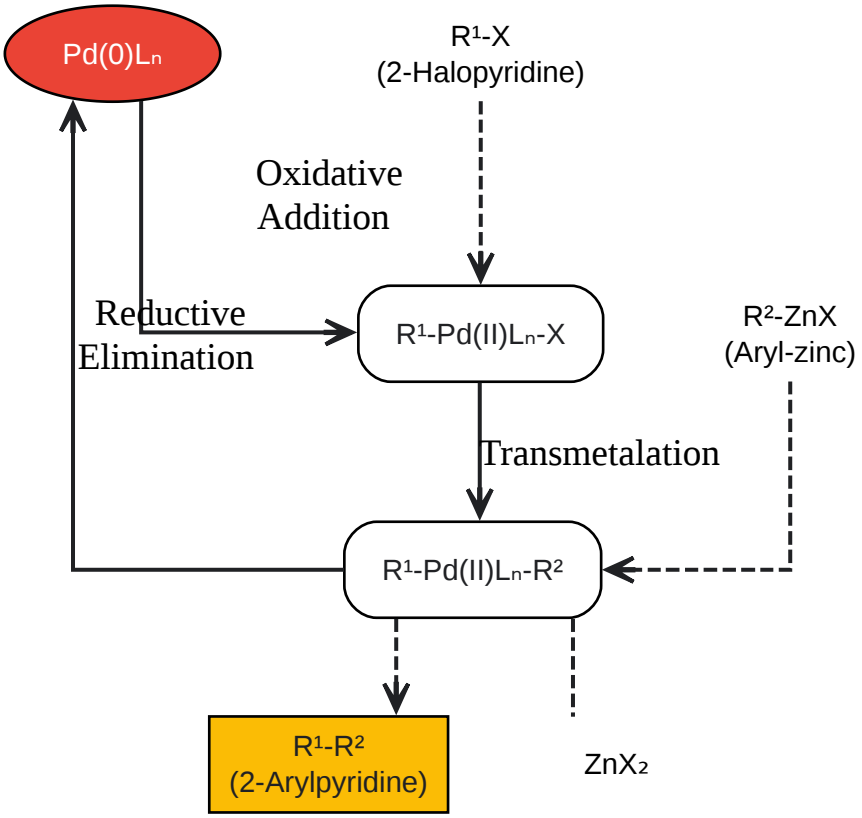

Click to download full resolution via product page

Caption: Catalytic cycle of the Negishi cross-coupling reaction.

Experimental Protocol: General Procedure for Negishi Coupling[12]

- Catalyst Pre-formation (Optional):
  - In a Schlenk flask, dissolve the palladium precursor (e.g., $Pd(OAc)_2$, 1-5 mol%) and the ligand (e.g., 2,3'-bipyridine, 1-5 mol%) in an anhydrous solvent and stir at room temperature for 15-30 minutes.[12]
- Reaction Setup:
  - To the flask containing the catalyst, add the aryl halide (1.0 equivalent) and additional anhydrous solvent.[12]
  - Slowly add the organozinc reagent (1.1-1.5 equivalents) at room temperature.[12]
- Reaction and Monitoring:

© 2026 BenchChem. All rights reserved.

- Heat the reaction mixture if necessary and monitor its progress by TLC or GC.

- Work-up:
  - Cool the reaction and quench with a saturated aqueous solution of NH_4Cl.[12]
  - Extract the product with an organic solvent, wash the combined organic layers with brine, dry over anhydrous Na_2SO_4, and concentrate under reduced pressure.[12]

Direct C-H Arylation

Direct C-H arylation has emerged as a more atom-economical and environmentally friendly approach, as it avoids the pre-functionalization of one of the coupling partners.

Experimental Protocol: Photoredox-Induced Meerwein Arylation[1][17]

This method utilizes in situ generated diazonium salts from anilines for the C-H arylation of pyridines under photoredox catalysis.[1]

- Reaction Setup:
  - In a reaction vessel, combine the aniline, pyridine, and a photoredox catalyst (e.g., fac-$Ir(ppy)_3$).
  - Add a diazotization agent.

- Reaction Conditions:
  - Irradiate the mixture with blue LEDs at room temperature.[1][17]

- Work-up and Analysis:
  - After the reaction is complete, the product can be isolated using standard purification techniques.
  - Yields can be determined by gas chromatography (GC) using an internal standard.[1]

Conclusion

© 2026 BenchChem. All rights reserved.

The synthesis of 2-aryl-substituted pyridines can be achieved through a variety of robust and versatile methods. The choice of the synthetic route should be guided by the specific requirements of the target molecule, including the desired substitution pattern and functional group tolerance. The protocols and data presented in this guide offer a starting point for researchers to develop and optimize their synthetic strategies for accessing this important class of compounds.

Need Custom Synthesis?

BenchChem offers custom synthesis for rare earth carbides and specific isotopiclabeling.

Email: info@benchchem.com or Request Quote Online.

References

- 1. pubs.acs.org [pubs.acs.org]
- 2. Kröhnke pyridine synthesis - Wikipedia [en.wikipedia.org]
- 3. benchchem.com [benchchem.com]
- 4. Synthesis of 2-arylpyridines by the Suzuki–Miyaura cross-coupling of PyFluor with hetero(aryl) boronic acids and esters - PMC [pmc.ncbi.nlm.nih.gov]
- 5. cdnsciencepub.com [cdnsciencepub.com]
- 6. researchgate.net [researchgate.net]
- 7. utoronto.scholaris.ca [utoronto.scholaris.ca]
- 8. Stille Coupling | NROChemistry [nrochemistry.com]
- 9. Stille Coupling [organic-chemistry.org]
- 10. organicreactions.org [organicreactions.org]
- 11. Stille reaction - Wikipedia [en.wikipedia.org]
- 12. benchchem.com [benchchem.com]
- 13. Negishi coupling - Wikipedia [en.wikipedia.org]
- 14. Negishi Coupling [organic-chemistry.org]
- 15. benchchem.com [benchchem.com]
- 16. denmarkgroup.web.illinois.edu [denmarkgroup.web.illinois.edu]

© 2026 BenchChem. All rights reserved.

- 17. [PDF] Synthesis of 2-Arylpyridines and 2-Arylbipyridines via Photoredox-Induced Meerwein Arylation with in-situ Diazotization of Anilines. | Semantic Scholar [semanticscholar.org]
- To cite this document: BenchChem. [Synthesis of 2-Aryl-Substituted Pyridines: An Application Note and Protocol Guide]. BenchChem, [2026]. [Online PDF]. Available at: [https://www.benchchem.com/product/b1278972/docs#synthesis-of-2-aryl-substituted-pyridines-an-application-note-and-protocol-guide]

Disclaimer & Data Validity:

The information provided in this document is for Research Use Only (RUO) and is strictly not intended for diagnostic or therapeutic procedures. While BenchChem strives to provide accurate protocols, we make no warranties, express or implied, regarding the fitness of this product for every specific experimental setup.

Technical Support: The protocols provided are for reference purposes. Unsure if this reagent suits your experiment?

Need Industrial/Bulk Grade? Request Custom Synthesis Quote

BenchChem

Our mission is to be the trusted global source of essential and advanced chemicals, empowering scientists and researchers to drive progress in science and industry.

Contact

Address: 3281 E Guasti Rd

Ontario, CA 91761, United States

Phone: (601) 213-4426

Email: info@benchchem.com

Contact our Ph.D. Support Team for a compatibility check

© 2026 BenchChem. All rights reserved.