A Guide to the Crystal Structure Analysis of Aromatic Sulfonates: Methodologies and Interpretations

Author: BenchChem Technical Support Team. **Date**: May 2026

Compound of Interest

Compound Name:	*Potassium hydrogen-5-aminobenzene-1,3-disulphonate*
CAS No.:	*27327-27-1*
Cat. No.:	*B12671440*

Get Quote

Preamble: An exhaustive search for the specific crystal structure of Potassium hydrogen-5-aminobenzene-1,3-disulfonate in publicly accessible crystallographic databases and the scientific literature did not yield a definitive, published structure. Consequently, this guide has been expertly crafted to provide researchers, scientists, and drug development professionals with a comprehensive, in-depth technical framework for the determination and analysis of the crystal structure of a novel aromatic sulfonate, using principles and methodologies applicable to the target compound class.

Introduction: The Significance of Crystalline Architecture

In the realm of pharmaceutical sciences and materials research, the precise three-dimensional arrangement of atoms and molecules within a crystal lattice is of paramount importance. This architecture dictates critical physicochemical properties, including solubility, stability, bioavailability, and mechanical strength. For active pharmaceutical ingredients (APIs),

© 2026 BenchChem. All rights reserved.

polymorphism—the ability of a compound to exist in multiple crystalline forms—can have profound implications for its therapeutic efficacy and regulatory approval.

Aromatic sulfonates are a class of compounds frequently encountered in medicinal chemistry and dye manufacturing. The presence of both amino and sulfonic acid functionalities imparts a zwitterionic character, leading to complex hydrogen-bonding networks that govern their solid-state structures.[1] Understanding these interactions is key to predicting and controlling the material's properties. This guide outlines the systematic approach to elucidating the crystal structure of such a compound, from initial synthesis to the final detailed analysis of its supramolecular chemistry.

Part 1: Synthesis and Crystallization: From Molecule to Single Crystal

The journey to a crystal structure begins with the synthesis of the target compound and the subsequent growth of high-quality single crystals suitable for X-ray diffraction.

Synthesis of Aromatic Aminosulfonic Acids

The synthesis of aminobenzene sulfonic acids typically involves the sulfonation of an aniline precursor. For instance, sulfanilic acid (4-aminobenzenesulfonic acid) is produced by the sulfonation of aniline with concentrated sulfuric acid.[1] The reaction proceeds through the formation of a phenylsulfamic acid intermediate. The specific substitution pattern of the sulfonic acid groups is directed by the reaction conditions, such as temperature and the nature of the sulfonating agent.

Exemplary Protocol: Synthesis of an Aminobenzene Disulfonic Acid Derivative

- Reaction Setup: Aniline or a substituted aniline is added portion-wise to a stirred solution of fuming sulfuric acid (oleum) at a controlled temperature, often below 10°C, to manage the exothermic reaction.
- Sulfonation: The reaction mixture is then heated to a specific temperature (e.g., 120-180°C) for several hours to drive the sulfonation to completion and achieve the desired isomeric product. The choice of temperature is critical for controlling the position of the second sulfonate group.

© 2026 BenchChem. All rights reserved.

- Work-up and Isolation: The reaction mixture is cooled and carefully poured onto ice. The resulting precipitate, the sulfonic acid, is collected by filtration, washed with cold water, and can be further purified by recrystallization.

- Salt Formation: To obtain the potassium salt, the purified acid is dissolved in a minimal amount of hot water, and a stoichiometric amount of a potassium base (e.g., potassium carbonate or potassium hydroxide) is added until the solution is neutralized.[2]

The Art and Science of Crystallization

Obtaining a single crystal of sufficient size and quality is often the most challenging step. The choice of crystallization method and solvent is crucial and often determined empirically.

Key Crystallization Techniques:

- Slow Evaporation: A saturated solution of the compound in a suitable solvent is left undisturbed in a loosely covered container, allowing the solvent to evaporate slowly over days or weeks.

- Vapor Diffusion: A concentrated solution of the compound in a small vial is placed inside a larger sealed container with a more volatile "anti-solvent" in which the compound is insoluble. The anti-solvent vapor slowly diffuses into the compound's solution, reducing its solubility and inducing crystallization.

- Cooling Crystallization: A saturated solution of the compound at an elevated temperature is slowly cooled, causing the solubility to decrease and crystals to form. The rate of cooling is a critical parameter.[3]

- Anti-Solvent Precipitation: A solvent in which the compound is soluble is layered with or has an "anti-solvent" (in which it is insoluble) slowly added. Crystallization occurs at the interface of the two solvents.

Choosing the Right Solvent System: The ideal solvent should exhibit moderate solubility for the compound, with solubility being temperature-dependent for cooling crystallization. The solvent's polarity and its ability to form hydrogen bonds can significantly influence the resulting crystal packing and may even lead to the formation of solvates.

© 2026 BenchChem. All rights reserved.

Part 2: Single-Crystal X-ray Diffraction: Illuminating the Atomic Structure

Single-crystal X-ray diffraction (SC-XRD) is the definitive method for determining the three-dimensional structure of a crystalline solid. The technique relies on the diffraction of an X-ray beam by the electron clouds of the atoms arranged in an ordered lattice.

Experimental Workflow for SC-XRD

The process of data collection is a meticulous one, requiring precision and careful handling of the crystal.

Caption: Workflow for Single-Crystal X-ray Diffraction Data Collection and Processing.

Detailed Steps:

- Crystal Mounting: A suitable single crystal (typically 0.1-0.3 mm in size) is carefully selected under a microscope and mounted on a goniometer head.
- Data Collection: The mounted crystal is placed in a diffractometer and cooled in a stream of cold nitrogen gas (typically to 100 K) to minimize thermal motion of the atoms. It is then exposed to a monochromatic X-ray beam. As the crystal is rotated, a series of diffraction patterns are collected on a detector.[4]
- Data Processing: The collected images are processed to determine the position and intensity of each diffraction spot. This data is then used to determine the unit cell parameters (the dimensions of the basic repeating unit of the crystal) and the space group (which describes the symmetry of the crystal lattice).

Part 3: Structure Solution, Refinement, and Validation

The processed diffraction data provides the intensities and positions of the reflections, but not their phase information. Solving the "phase problem" is the key to revealing the electron density and thus the atomic positions.

From Diffraction Pattern to Molecular Structure:

© 2026 BenchChem. All rights reserved.

Caption: The process of solving and refining a crystal structure.

- Structure Solution: For small molecules, "direct methods" are typically used to computationally derive an initial set of phases. This allows for the calculation of an initial electron density map.
- Model Building: From the electron density map, the positions of the atoms can be identified and a preliminary structural model is built.
- Structure Refinement: The initial model is refined against the experimental data using a least-squares method. In this iterative process, the atomic positions and their anisotropic displacement parameters (which describe their thermal motion) are adjusted to improve the agreement between the observed and calculated diffraction patterns.
- Validation: The final structure is rigorously validated using a variety of metrics to ensure its chemical and crystallographic soundness.

Table 1: Key Crystallographic Data to be Determined

Parameter	Description
Formula	The chemical formula of the compound.
Crystal System	The crystal system (e.g., monoclinic, orthorhombic).[5]
Space Group	The specific symmetry of the crystal lattice.
Unit Cell Dimensions	The lengths (a, b, c) and angles (α, β, γ) of the unit cell.
Z	The number of formula units per unit cell.
R-factor (R1)	A measure of the agreement between the crystallographic model and the experimental X-ray diffraction data.
Goodness-of-Fit (GooF)	An indicator of the quality of the structure refinement.

© 2026 BenchChem. All rights reserved.

Part 4: Analysis of the Crystal Structure: Deciphering Intermolecular Interactions

With a refined and validated crystal structure, the focus shifts to a detailed analysis of its features, particularly the non-covalent interactions that dictate the crystal packing. For aminobenzene sulfonates, hydrogen bonding is a dominant feature.

Hydrogen Bonding Networks

The amino group (-NH_2) and the deprotonated sulfonate group (-SO_3^-) are excellent hydrogen bond donors and acceptors, respectively. The analysis of these interactions is crucial.

- Donor-Acceptor Pairs: Identify all potential hydrogen bond donors (N-H, O-H) and acceptors (sulfonate oxygens, nitrogen atoms).
- Geometric Analysis: The distances and angles of these bonds are measured to determine their strength and geometry.
- Supramolecular Motifs: The hydrogen bonds often form recognizable patterns, such as chains, sheets, or three-dimensional networks, which define the overall crystal architecture. [6][7]

Hypothetical Hydrogen Bonding in a Potassium Aminobenzene Sulfonate:

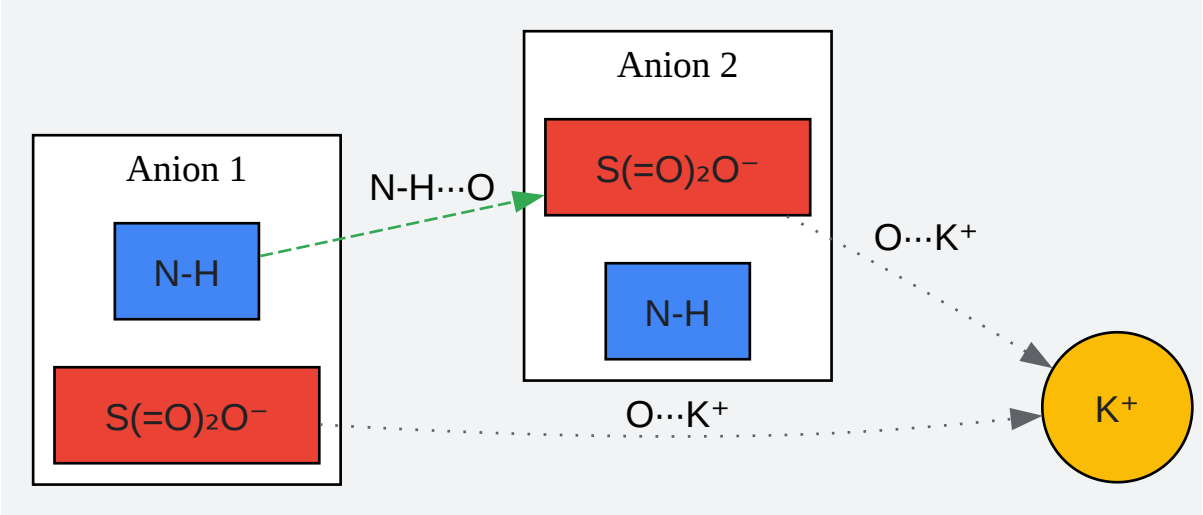

Click to download full resolution via product page

© 2026 BenchChem. All rights reserved.

Need Custom Synthesis?

BenchChem offers custom synthesis for rare earth carbides and specific isotopiclabeling.

Email: info@benchchem.com or Request Quote Online.

Sources

- 1. Sulfanilic acid - Wikipedia [en.wikipedia.org]
- 2. Potassium Sulfamate [dmishin.github.io]
- 3. researchgate.net [researchgate.net]
- 4. 4-Aminopyridinium 4-aminobenzenesulfonate 4-ammoniobenzenesulfonate monohydrate - PMC [pmc.ncbi.nlm.nih.gov]
- 5. bulletin.incas.ro [bulletin.incas.ro]
- 6. Supramolecular organisation via hydrogen bonding in trimethoprim sulfonate salts - CrystEngComm (RSC Publishing) [pubs.rsc.org]
- 7. researchgate.net [researchgate.net]

- To cite this document: BenchChem. [A Guide to the Crystal Structure Analysis of Aromatic Sulfonates: Methodologies and Interpretations]. BenchChem, [2026]. [Online PDF]. Available at: [https://www.benchchem.com/product/b12671440/docs#a-guide-to-the-crystal-structure-analysis-of-aromatic-sulfonates-methodologies-and-interpretations]

Disclaimer & Data Validity:

The information provided in this document is for Research Use Only (RUO) and is strictly not intended for diagnostic or therapeutic procedures. While BenchChem strives to provide accurate protocols, we make no warranties, express or implied, regarding the fitness of this product for every specific experimental setup.

Technical Support: The protocols provided are for reference purposes. Unsure if this reagent suits your experiment?

Need Industrial/Bulk Grade? Request Custom Synthesis Quote

© 2026 BenchChem. All rights reserved.

BenchChem

Our mission is to be the trusted global source of essential and advanced chemicals, empowering scientists and researchers to drive progress in science and industry.

Contact

Address: 3281 E Guasti Rd

Ontario, CA 91761, United States

Phone: (601) 213-4426

Email: info@benchchem.com

Contact our Ph.D. Support Team for a compatibility check

© 2026 BenchChem. All rights reserved.