Solid-Phase Synthesis of a 4-Aminobenzamide Library: An Application Note and Protocol

Author: BenchChem Technical Support Team. **Date**: January 2026

Compound of Interest		
Compound Name:	*4-amino-N-(2-hydroxyethyl)benzamide*	
Cat. No.:	*B1267974*	*Get Quote*

Introduction: The Power of Solid-Phase Synthesis for Small Molecule Libraries

Solid-phase synthesis (SPS) has become an indispensable tool in modern drug discovery and chemical biology, enabling the rapid and efficient construction of large libraries of organic molecules.[1][2] This methodology, originally pioneered by Bruce Merrifield for peptide synthesis, involves the stepwise assembly of a target molecule on an insoluble polymeric support, or resin.[1] The key advantage of SPS lies in the simplification of purification; excess reagents and byproducts are easily removed by simple filtration and washing of the resin, thereby circumventing the often laborious and time-consuming purification steps required in traditional solution-phase chemistry.[1][2]

This application note provides a detailed guide to the solid-phase synthesis of a diverse 4-aminobenzamide library. The 4-aminobenzamide scaffold is a common motif in medicinally important compounds, and the ability to rapidly generate a library of analogs is of significant interest for structure-activity relationship (SAR) studies. We will detail a robust and reproducible protocol, from the initial loading of the core building block, Fmoc-4-aminobenzoic acid, onto a solid support, through to the diversification with a variety of primary and secondary amines, and finally, the cleavage and purification of the final products.

Scientific Rationale and Strategy

© 2025 BenchChem. All rights reserved.

The synthetic strategy for the 4-aminobenzamide library is centered around a modular approach, allowing for the introduction of diversity at a key position. The overall workflow is depicted below:

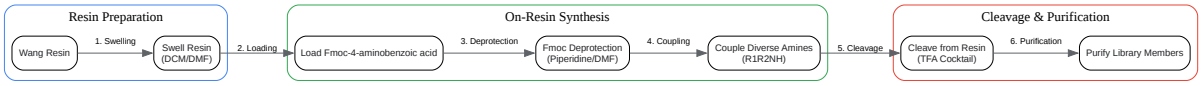

Click to download full resolution via product page

Figure 1: Overall workflow for the solid-phase synthesis of a 4-aminobenzamide library.

The choice of Wang resin as the solid support is predicated on its acid-labile linker, which allows for the release of the final carboxamide products under relatively mild acidic conditions. [3] The synthesis commences with the esterification of N-terminally protected Fmoc-4-aminobenzoic acid to the resin. The fluorenylmethoxycarbonyl (Fmoc) protecting group is then removed with a mild base, typically piperidine in dimethylformamide (DMF), to expose the free aniline. This free amine serves as the point for diversification, where a library of various primary and secondary amines can be coupled to the solid-supported scaffold. Finally, the desired 4-aminobenzamide derivatives are cleaved from the resin using a trifluoroacetic acid (TFA)-based cocktail.

Materials and Reagents

© 2025 BenchChem. All rights reserved.

Reagent	Grade	Supplier
Wang Resin (100-200 mesh, 1% DVB)	Synthesis Grade	Sigma-Aldrich
Fmoc-4-aminobenzoic acid	≥98%	Commercially Available
N,N'-Diisopropylcarbodiimide (DIC)	≥99%	Sigma-Aldrich
1-Hydroxybenzotriazole (HOBt)	Anhydrous, ≥97%	Sigma-Aldrich
4-(Dimethylamino)pyridine (DMAP)	≥99%	Sigma-Aldrich
Piperidine	Reagent Grade	Sigma-Aldrich
N,N-Dimethylformamide (DMF)	Anhydrous, ≥99.8%	Sigma-Aldrich
Dichloromethane (DCM)	Anhydrous, ≥99.8%	Sigma-Aldrich
Acetic Anhydride	≥99%	Sigma-Aldrich
Pyridine	Anhydrous, ≥99.8%	Sigma-Aldrich
Trifluoroacetic Acid (TFA)	Reagent Grade	Sigma-Aldrich
Triisopropylsilane (TIS)	98%	Sigma-Aldrich
Diverse Primary and Secondary Amines	Various	Commercially Available
Diethyl Ether	Anhydrous	Fisher Scientific

Safety Precautions: Always work in a well-ventilated fume hood and wear appropriate personal protective equipment (PPE), including safety glasses, lab coat, and chemical-resistant gloves. Trifluoroacetic acid is highly corrosive and should be handled with extreme care.

Experimental Protocols

© 2025 BenchChem. All rights reserved.

Protocol 1: Loading of Fmoc-4-aminobenzoic acid onto Wang Resin

This protocol describes the esterification of Fmoc-4-aminobenzoic acid to the hydroxyl groups of the Wang resin.

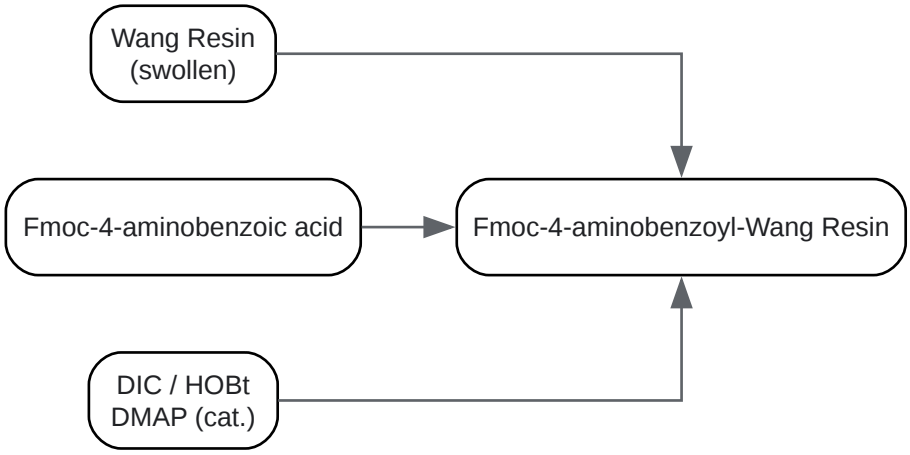

Click to download full resolution via product page

Figure 2: Loading of Fmoc-4-aminobenzoic acid onto Wang resin.

Procedure:

- Resin Swelling: In a fritted syringe reaction vessel, add Wang resin (1.0 g, ~1.0 mmol/g loading). Swell the resin in a 9:1 (v/v) mixture of DCM and DMF (10 mL) for 1 hour at room temperature with gentle agitation.
- Reagent Preparation: In a separate vial, dissolve Fmoc-4-aminobenzoic acid (4 equivalents relative to the resin's loading) and HOBt (4 equivalents) in a minimal amount of DMF. In another vial, dissolve DMAP (0.1 equivalents) in a minimal amount of DMF.
- Coupling Reaction: Drain the swelling solvent from the resin. Add the Fmoc-4-aminobenzoic acid/HOBt solution to the resin. Then, add DIC (4 equivalents) to the resin slurry and agitate. Finally, add the DMAP solution.[4]
- Reaction Incubation: Agitate the reaction mixture on a shaker for 12 hours at room temperature.

© 2025 BenchChem. All rights reserved.

- Capping Unreacted Sites: Drain the reaction mixture. To cap any unreacted hydroxyl groups on the resin, add a solution of acetic anhydride (2 equivalents) and pyridine (2 equivalents) in DCM. Agitate for 30 minutes.[5]
- Washing: Drain the capping solution and wash the resin sequentially with DMF (3 x 10 mL), a 1:1 mixture of DMF/DCM (3 x 10 mL), and DCM (3 x 10 mL).
- Drying: Dry the resin under high vacuum to a constant weight.
- Loading Determination (Optional): The substitution level of the resin can be determined spectrophotometrically by measuring the amount of Fmoc group released from a small, weighed sample of the resin upon treatment with a piperidine/DMF solution.

Protocol 2: Fmoc Deprotection

This protocol details the removal of the Fmoc protecting group to expose the free amine for subsequent coupling.

Procedure:

- Resin Swelling: Swell the Fmoc-4-aminobenzoyl-Wang resin in DMF (10 mL/g) for 30 minutes.
- Deprotection: Drain the DMF and add a 20% (v/v) solution of piperidine in DMF. Agitate for 20 minutes at room temperature.
- Washing: Drain the deprotection solution and wash the resin thoroughly with DMF (5 x 10 mL) and then DCM (3 x 10 mL) to ensure complete removal of piperidine and the dibenzofulvene-piperidine adduct.
- Kaiser Test: To confirm the presence of the free primary amine, perform a Kaiser test on a small sample of the resin beads. A positive result is indicated by a deep blue color.

Protocol 3: Amine Coupling for Library Diversification

This protocol describes the coupling of a diverse set of primary and secondary amines to the solid-supported 4-aminobenzoic acid scaffold. This step is typically performed in parallel in a multi-well reaction block to generate the library.

© 2025 BenchChem. All rights reserved.

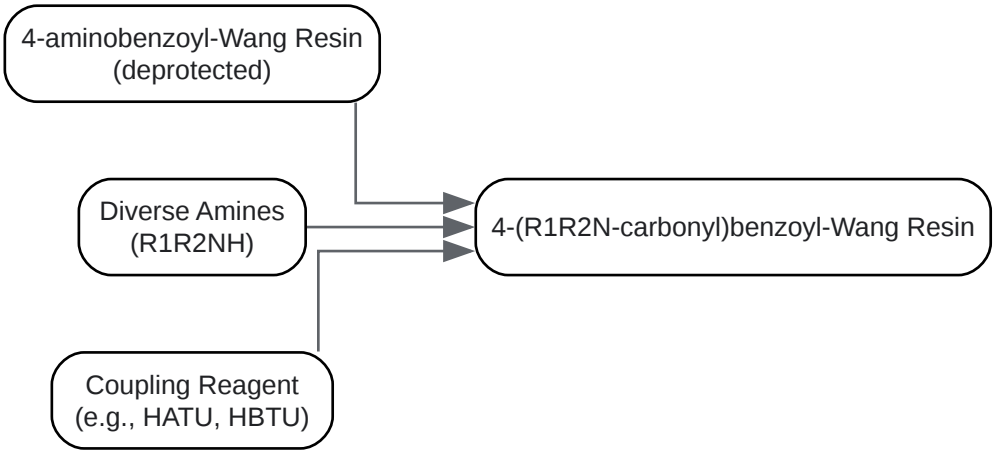

Click to download full resolution via product page

Figure 3: Coupling of diverse amines to the solid-supported scaffold.

Procedure:

- Resin Aliquoting: Distribute the deprotected 4-aminobenzoyl-Wang resin into the wells of a parallel synthesis reactor.
- Reagent Addition: To each well, add a solution of the desired primary or secondary amine (3 equivalents) and a suitable coupling reagent such as HATU (2.9 equivalents) and an appropriate base like N,N-diisopropylethylamine (DIPEA) (6 equivalents) in DMF.
- Coupling Reaction: Agitate the reaction block at room temperature for 2-4 hours, or until the reaction is complete as monitored by a negative Kaiser test (indicating the absence of free primary amine).
- Washing: Drain the reaction solutions and wash the resin in each well sequentially with DMF (3x), DCM (3x), and methanol (3x).
- Drying: Dry the resin under high vacuum.

Protocol 4: Cleavage and Product Isolation

This protocol describes the cleavage of the final 4-aminobenzamide products from the solid support.

© 2025 BenchChem. All rights reserved.

Procedure:

- Resin Preparation: Place the dried, resin-bound products in appropriately labeled vials.
- Cleavage Cocktail: Prepare a cleavage cocktail of 95% TFA, 2.5% water, and 2.5% triisopropylsilane (TIS). TIS acts as a scavenger to trap any reactive species generated during the cleavage.
- Cleavage Reaction: Add the cleavage cocktail to each vial containing the resin (approximately 1 mL per 100 mg of resin). Agitate at room temperature for 2-3 hours.
- Product Isolation: Filter the resin and collect the filtrate containing the cleaved product. Wash the resin with a small amount of fresh TFA, and combine the filtrates.
- Precipitation: Add the combined filtrate dropwise to a 10-fold volume of cold diethyl ether to precipitate the crude product.
- Purification: Collect the precipitate by centrifugation or filtration. The crude products can be further purified by techniques such as preparative high-performance liquid chromatography (HPLC) to obtain the final, pure library members.

Characterization and Data Analysis

The identity and purity of the individual library members should be confirmed using standard analytical techniques:

- High-Performance Liquid Chromatography (HPLC): To assess the purity of the crude and purified products.
- Mass Spectrometry (MS): To confirm the molecular weight of the synthesized compounds.

The results of the synthesis can be tabulated to provide a clear overview of the library, including the structures of the amines used and the yields and purities of the final products.

© 2025 BenchChem. All rights reserved.

Library Member	Amine (R1R2NH)	Yield (%)	Purity (%)
1	Benzylamine	85	>95
2	Morpholine	92	>98
3	n-Butylamine	88	>95
...	...	...	...

Conclusion

This application note provides a comprehensive and field-proven protocol for the solid-phase synthesis of a 4-aminobenzamide library. The described methodology is robust, versatile, and amenable to high-throughput parallel synthesis, making it an ideal approach for generating diverse compound libraries for drug discovery and other research applications. By following these detailed procedures, researchers can efficiently synthesize and evaluate a wide range of 4-aminobenzamide derivatives.

References

- Peptideweb.com. Loading protocols. Available at: [Link]
- Aapptec Peptides. Technical Support Information Bulletin 1183 - Preparing Low-Loading Fmoc-Amino Acid Wang Resins From High Substitution Wang Resin. Available at: [Link]
- Ravindranath, B., et al. (2008). A protocol for racemization-free loading of Fmoc-amino acids to Wang resin. Tetrahedron Letters, 49(20), 3231-3234.
- Aapptec Peptides. Technical Support Information Bulletin 1073 - Wang Resin. Available at: [Link]
- Bonkowski, B., et al. (2013). Basic Concepts of using Solid Phase Synthesis to Build Small Organic Molecules using 2-Chlorotrityl Chloride Resin.
- SpiroChem. Solid Phase Synthesis. Available at: [Link]
- Aapptec Peptides. Peptide Synthesis Resins. Available at: [Link]

© 2025 BenchChem. All rights reserved.

- Royal Society of Chemistry. (2020). Greening the synthesis of peptide therapeutics: an industrial perspective. Available at: [Link]
- Thompson, L. A., & Ellman, J. A. (1996). The Solid-Phase Part of Supported Small-Molecule Synthesis. CHIMIA International Journal for Chemistry, 50(5), 200-203.
- Sathiya, S., et al. (2019). SYNTHESIS AND ANTIMICROBIAL ACTIVITY OF NOVEL 4-AMINO BENZAMIDE DERIVED 1,2,3 - TRIAZOLE LINKED PYRAZOLINES. RASĀYAN Journal of Chemistry, 12(4), 2260-2266.
- National Center for Biotechnology Information. PubChem Compound Summary for CID 76079, 4-Aminobenzamide. Available at: [Link]

Need Custom Synthesis?

BenchChem offers custom synthesis for rare earth carbides and specific isotopiclabeling.

Email: info@benchchem.com or Request Quote Online.

Sources

- 1. walshmedicalmedia.com [walshmedicalmedia.com]
- 2. Solid Phase Synthesis | SpiroChem [spirochem.com]
- 3. peptide.com [peptide.com]
- 4. peptideweb.com [peptideweb.com]
- 5. peptide.com [peptide.com]
- To cite this document: BenchChem. [Solid-Phase Synthesis of a 4-Aminobenzamide Library: An Application Note and Protocol]. BenchChem, [2026]. [Online PDF]. Available at: [https://www.benchchem.com/product/b1267974#solid-phase-synthesis-of-a-4-aminobenzamide-library]

Disclaimer & Data Validity:

The information provided in this document is for Research Use Only (RUO) and is strictly not intended for diagnostic or therapeutic procedures. While BenchChem strives to provide accurate protocols, we make no warranties, express or implied, regarding the fitness of this product for every specific experimental setup.

© 2025 BenchChem. All rights reserved.

Technical Support: The protocols provided are for reference purposes. Unsure if this reagent suits your experiment? [Contact our Ph.D. Support Team for a compatibility check]

Need Industrial/Bulk Grade? Request Custom Synthesis Quote

BenchChem

Our mission is to be the trusted global source of essential and advanced chemicals, empowering scientists and researchers to drive progress in science and industry.

Contact

Address: 3281 E Guasti Rd

Ontario, CA 91761, United States

Phone: (601) 213-4426

Email: info@benchchem.com

© 2025 BenchChem. All rights reserved.