AZD5597 vs. Ribociclib: A Comparative Efficacy Analysis for Researchers

Author: BenchChem Technical Support Team. **Date**: April 2026

Compound of Interest

Compound Name: *AZD5597*

Cat. No.: *B1264291*

Get Quote

In the landscape of targeted cancer therapies, inhibitors of cyclin-dependent kinases (CDKs) have emerged as a pivotal class of drugs. This guide provides a detailed comparison of the preclinical efficacy of two such inhibitors: **AZD5597** and ribociclib. While both target CDKs, their distinct selectivity profiles translate to different mechanisms of action and potential therapeutic applications. This document is intended for researchers, scientists, and drug development professionals, offering a comprehensive overview of the available preclinical data, experimental methodologies, and the signaling pathways implicated.

Mechanism of Action and Targeted Pathways

AZD5597 is a potent, multi-targeted CDK inhibitor with high affinity for CDK1, CDK2, and CDK9.[1] Inhibition of these CDKs disrupts multiple phases of the cell cycle. CDK1/cyclin B is essential for the G2/M transition, while CDK2/cyclin E and CDK2/cyclin A regulate the G1/S transition and S-phase progression, respectively. CDK9 is a component of the positive transcription elongation factor b (P-TEFb), which is crucial for the transcription of many proto-oncogenes. By inhibiting these key cell cycle and transcriptional regulators, **AZD5597** is designed to induce broad anti-proliferative effects across a range of cancer cell lines.[1][2]

© 2026 BenchChem. All rights reserved.

Ribociclib, in contrast, is a highly selective inhibitor of CDK4 and CDK6.[3][4][5] These kinases, in complex with D-type cyclins, are key regulators of the G1 to S phase transition.[4][6] The cyclin D-CDK4/6 complex phosphorylates the retinoblastoma protein (Rb), releasing the E2F transcription factor and allowing for the expression of genes necessary for DNA replication.[3][5] By selectively targeting CDK4/6, ribociclib induces a G1 cell cycle arrest, thereby inhibiting the proliferation of cancer cells that are dependent on this pathway, particularly hormone receptor-positive (HR+) breast cancers.[3][7]

Preclinical Efficacy: A Quantitative Comparison

A direct head-to-head preclinical comparison of **AZD5597** and ribociclib has not been published. The following tables summarize the available quantitative data from separate studies to facilitate an indirect comparison of their potency and efficacy.

Table 1: In Vitro Enzymatic and Anti-proliferative Activity

© 2026 BenchChem. All rights reserved.

Compound	Target	IC50 (nM)	Cell Line	Assay Type	IC50 (nM)	Reference(s)
AZD5597	CDK1	2	LoVo	BrdU Incorporation	39	[6][8]
	CDK2	2				
	CDK9	-				
Ribociclib	CDK4	10	JeKo-1	Cell Proliferation (CyQuant)	80 ± 20	[2][3][7]
	CDK6	39	CAMA-1	Cell Proliferation (CyQuant)	90 ± 10	[3]
			MCF-7	Cell Proliferation (CyQuant)	120 ± 30	[3]
			T47D	Cell Proliferation (CyQuant)	130 ± 20	[3]
			MDA-MB-453	Cell Viability (MTT)	49,000 ± 600	[4]
			MDA-MB-468	Cell Viability (MTT)	72,000 ± 3600	[4]

Note: IC50 values for cell-based assays are highly dependent on the specific experimental conditions (e.g., cell line, assay duration, readout method) and should be compared with

© 2026 BenchChem. All rights reserved.

caution.

Table 2: In Vivo Efficacy in Xenograft Models

Compound	Cancer Model	Host	Dosing Regimen	Tumor Growth Inhibition (TGI)	Reference(s)
AZD5597	Colon Adenocarcinoma (LoVo)	Mouse	15 mg/kg, intraperitoneal, intermittent for 3 weeks	55%	[6]
Ribociclib	Mantle Cell Lymphoma (JeKo-1)	Rat	75 and 150 mg/kg, once daily	Induces tumor regressions	[3]
ER+ Breast Cancer	Mouse	Not specified	Significant TGI	[1][5]	

Signaling Pathway Diagrams

The following diagrams illustrate the targeted signaling pathways of **AZD5597** and ribociclib.

© 2026 BenchChem. All rights reserved.

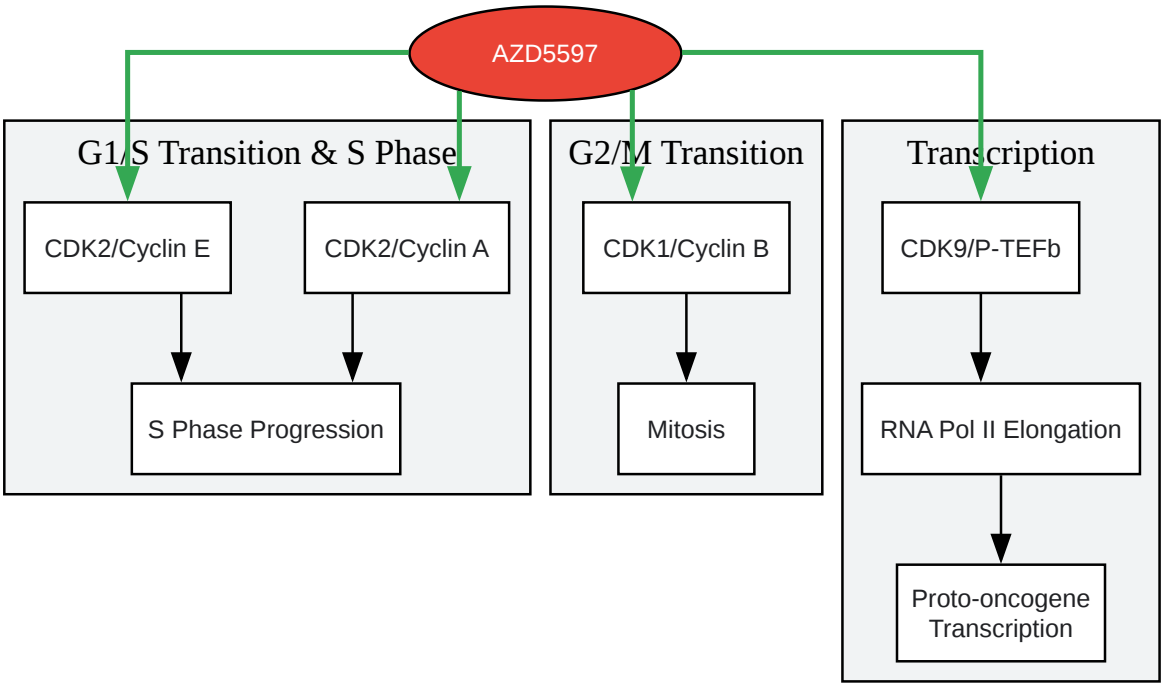

Click to download full resolution via product page

Figure 1: AZD5597 Signaling Pathway

© 2026 BenchChem. All rights reserved.

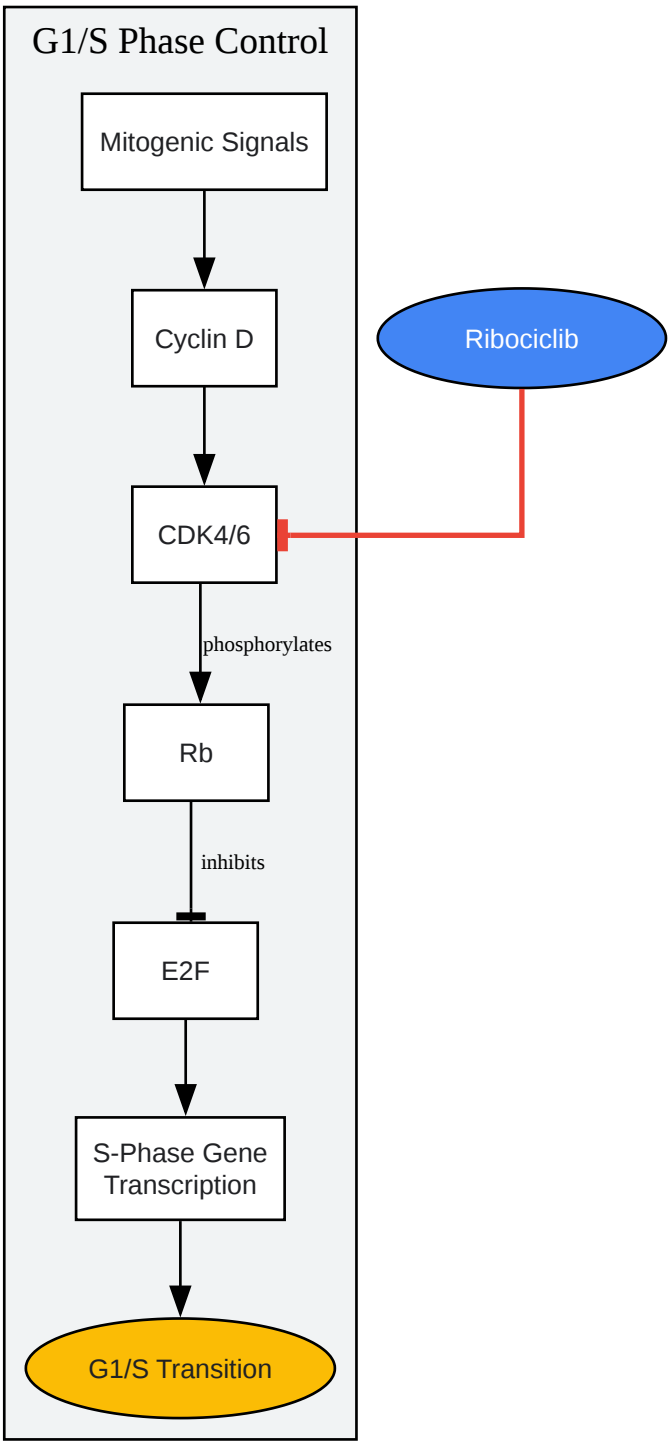

Click to download full resolution via product page

Figure 2: Ribociclib Signaling Pathway

Experimental Protocols

© 2026 BenchChem. All rights reserved.

Detailed methodologies are crucial for the interpretation and replication of preclinical findings. Below are representative protocols for key experiments cited in the efficacy evaluation of CDK inhibitors.

In Vitro Cell Proliferation Assay (CyQuant Assay)

- Cell Seeding: Cancer cell lines are seeded into 96-well microplates at a density of 1,000-5,000 cells per well in their respective growth media and incubated overnight at 37°C in a humidified atmosphere of 5% CO2.
- Drug Treatment: The following day, cells are treated with a serial dilution of the test compound (e.g., **AZD5597** or ribociclib) or vehicle control (e.g., DMSO).
- Incubation: The plates are incubated for a specified period, typically 72 hours, under the same conditions.
- Cell Lysis and Staining: At the end of the incubation, the growth medium is removed, and the cells are lysed. A DNA-binding fluorescent dye from the CyQuant Cell Proliferation Assay Kit is added to each well.
- Fluorescence Measurement: The fluorescence intensity, which is proportional to the number of cells, is measured using a microplate reader at the appropriate excitation and emission wavelengths.
- Data Analysis: The fluorescence readings are used to calculate the percentage of cell growth inhibition relative to the vehicle-treated control. IC50 values are determined by plotting the percentage of inhibition against the logarithm of the drug concentration and fitting the data to a four-parameter logistic curve.

In Vivo Tumor Xenograft Study

- Animal Model: Immunocompromised mice (e.g., athymic nude or SCID mice) are used.
- Tumor Cell Implantation: A suspension of cancer cells (e.g., 1 x 10^7 cells in a mixture of media and Matrigel) is injected subcutaneously into the flank of each mouse.
- Tumor Growth Monitoring: Tumors are allowed to grow to a palpable size (e.g., 100-200 mm^3). Tumor volume is measured regularly (e.g., twice weekly) using calipers, and the

© 2026 BenchChem. All rights reserved.

volume is calculated using the formula: (length x width²)/2.

- Randomization and Treatment: Once tumors reach the desired size, the animals are randomized into treatment and control groups. The test compound (e.g., **AZD5597** or ribociclib) is administered according to the specified dosing regimen (e.g., daily oral gavage or intraperitoneal injection). The control group receives the vehicle.
- Efficacy Assessment: Tumor volumes and body weights are monitored throughout the study. The primary efficacy endpoint is typically tumor growth inhibition (TGI), calculated as the percentage difference in the mean tumor volume between the treated and control groups.
- Ethical Considerations: All animal experiments must be conducted in accordance with institutional and national guidelines for the care and use of laboratory animals and with approval from the Institutional Animal Care and Use Committee (IACUC).

Experimental Workflow Diagram

© 2026 BenchChem. All rights reserved.

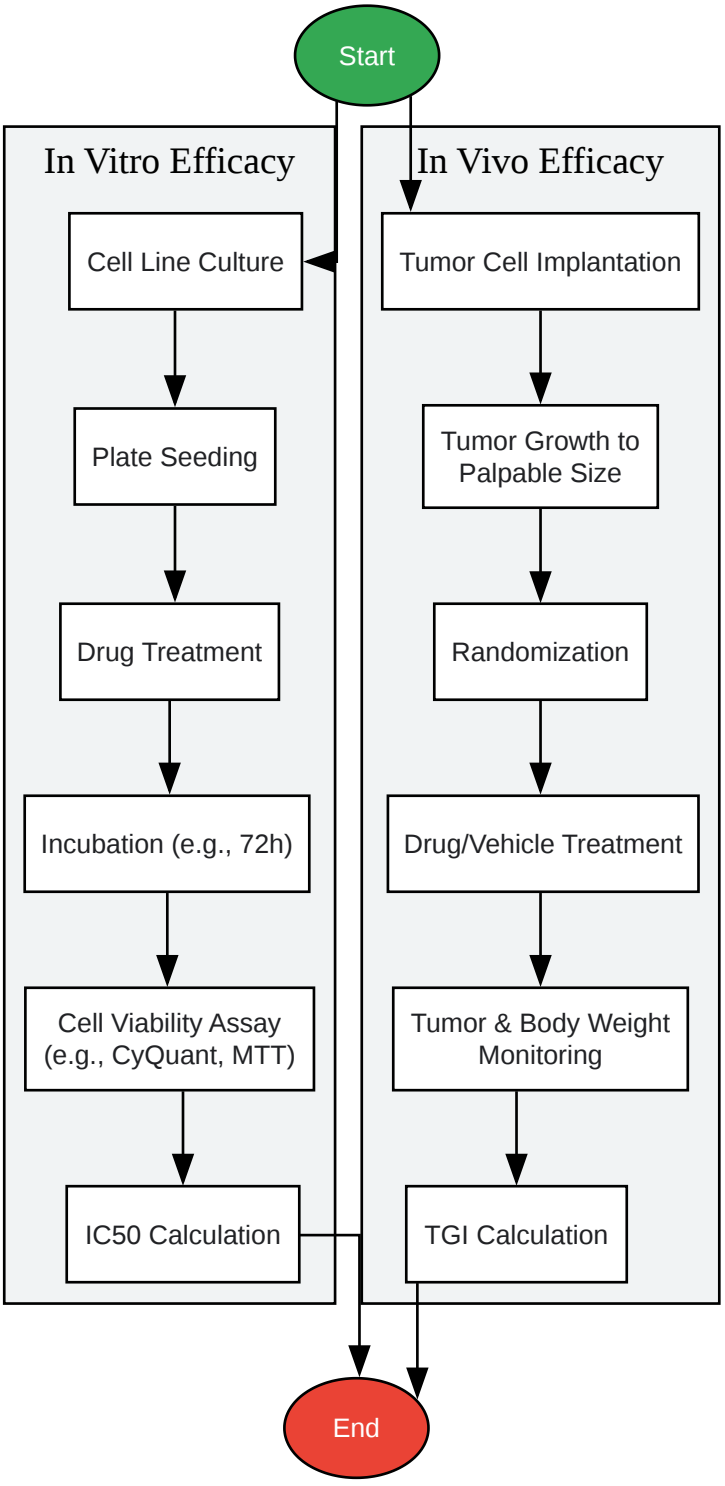

Click to download full resolution via product page

Need Custom Synthesis?

BenchChem offers custom synthesis for rare earth carbides and specific isotopiclabeling.

Email: info@benchchem.com or Request Quote Online.

© 2026 BenchChem. All rights reserved.

References

- 1. Drug: Ribociclib - Cancerrxgene - Genomics of Drug Sensitivity in Cancer [cancerrxgene.org]
- 2. Assessment of Cell Viability in Drug Therapy: IC50 and Other New Time-Independent Indices for Evaluating Chemotherapy Efficacy - PMC [pmc.ncbi.nlm.nih.gov]
- 3. medchemexpress.com [medchemexpress.com]
- 4. Preclinical Evaluation of the Efficacy of a Cyclin-dependent Kinase Inhibitor Ribociclib in Combination with Letrozole Against Patient-Derived Glioblastoma Cells - PMC [pmc.ncbi.nlm.nih.gov]
- 5. medchemexpress.com [medchemexpress.com]
- 6. The potent and selective cyclin-dependent kinases 4 and 6 inhibitor ribociclib (LEE011) is a versatile combination partner in preclinical cancer models - PMC [pmc.ncbi.nlm.nih.gov]
- 7. researchgate.net [researchgate.net]
- 8. aacrjournals.org [aacrjournals.org]

- To cite this document: BenchChem. [AZD5597 vs. Ribociclib: A Comparative Efficacy Analysis for Researchers]. BenchChem, [2026]. [Online PDF]. Available at: [https://www.benchchem.com/product/b1264291/docs#azd5597-vs-ribociclib-a-comparative-efficacy-analysis-for-researchers]

Disclaimer & Data Validity:

The information provided in this document is for Research Use Only (RUO) and is strictly not intended for diagnostic or therapeutic procedures. While BenchChem strives to provide accurate protocols, we make no warranties, express or implied, regarding the fitness of this product for every specific experimental setup.

Technical Support: The protocols provided are for reference purposes. Unsure if this reagent suits your experiment?

Need Industrial/Bulk Grade? Request Custom Synthesis Quote

© 2026 BenchChem. All rights reserved.

BenchChem

Our mission is to be the trusted global source of essential and advanced chemicals, empowering scientists and researchers to drive progress in science and industry.

Contact

Address: 3281 E Guasti Rd

Ontario, CA 91761, United States

Phone: (601) 213-4426

Email: info@benchchem.com

Contact our Ph.D. Support Team for a compatibility check

© 2026 BenchChem. All rights reserved.