Technical Application Note: Scalable Synthesis of 1-((2-Ethylhexyl)oxy)-4-methoxybenzene

Author: BenchChem Technical Support Team. **Date**: May 2026

Compound of Interest

Compound Name:	*1-((2-Ethylhexyl)oxy)-4-methoxybenzene*
CAS No.:	*146370-51-6*
Cat. No.:	*B126864*

Get Quote

Abstract & Scope

This application note details a robust, scalable protocol for the synthesis of **1-((2-Ethylhexyl)oxy)-4-methoxybenzene** (CAS: 146370-51-6). This ether is a critical intermediate in the production of conjugated polymers, specifically MEH-PPV (Poly[2-methoxy-5-(2-ethylhexyloxy)-1,4-phenylenevinylene]), widely used in organic photovoltaics (OPV) and organic light-emitting diodes (OLEDs).

The method utilizes a Williamson Ether Synthesis approach, optimized for the steric hindrance of the 2-ethylhexyl group. Unlike standard primary alkylations, this protocol incorporates Finkelstein catalysis (in-situ) to enhance reaction kinetics and suppress elimination side-products.

Retrosynthetic Analysis & Strategy

The target molecule is an unsymmetrical ether constructed from a phenol and a branched primary alkyl halide.

© 2026 BenchChem. All rights reserved.

- Bond Disconnection: O-C(alkyl) bond.
- Nucleophile: 4-Methoxyphenol (MEHQ/PMP), deprotonated to the phenoxide.
- Electrophile: 2-Ethylhexyl bromide.
- Challenge: The 2-ethylhexyl group possesses

  -branching, creating steric hindrance that slows

  attack compared to linear alkyl halides.
- Solution: Use of a polar aprotic solvent (DMF) to solvate the cation (K+) and leave the phenoxide "naked" and reactive, combined with Potassium Iodide (KI) to convert the bromide to a more reactive iodide in situ.

Reaction Scheme Visualization

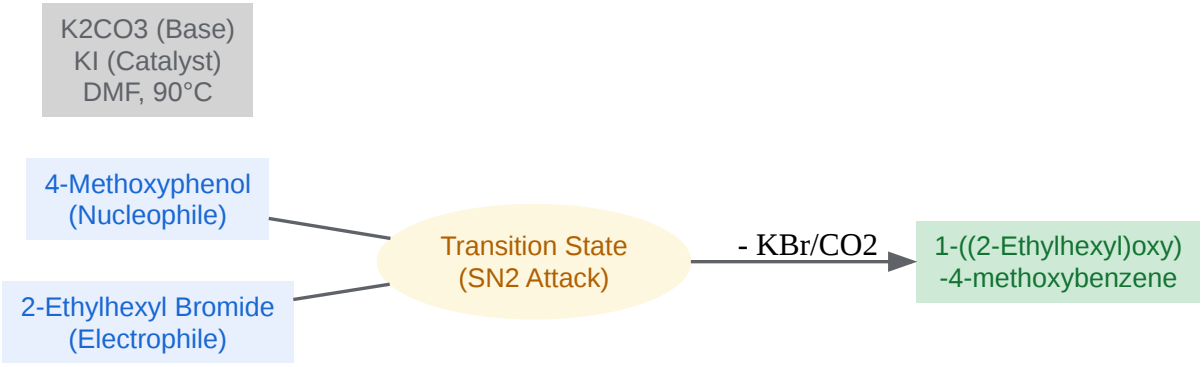

Click to download full resolution via product page

Figure 1: Reaction pathway for the alkylation of 4-methoxyphenol.

Materials & Safety Protocol

Reagents Table

Reagent	Equiv.	Role	Key Property
4-Methoxyphenol	1.0	Nucleophile	Solid, mp 56°C. Air sensitive (oxidizes to quinones).
2-Ethylhexyl bromide	1.2	Electrophile	Liquid. Sterically hindered primary halide.[1]
Potassium Carbonate (K_2CO_3)	2.0	Base	Anhydrous required. Granular preferred over powder to prevent clumping.
Potassium Iodide (KI)	0.1	Catalyst	Increases rate via halogen exchange.
DMF (N,N-Dimethylformamide)	Solvent	Solvent	Polar aprotic. High bp (153°C). Toxic.

Critical Safety (HSE)

- 4-Methoxyphenol (MEHQ): Severe eye irritant and sensitizer. Can inhibit polymerization; often contains stabilizers. Ensure the grade used is suitable for synthesis (99%).
- DMF: Hepatotoxin and readily absorbed through skin. Must be handled in a fume hood with butyl rubber or Silver Shield gloves (nitrile provides poor protection against DMF).
- Exotherm: The deprotonation step is mildly exothermic.

Experimental Protocol

Step 1: Reaction Setup

- Equip a 3-neck round-bottom flask (RBF) with a magnetic stir bar, a reflux condenser, a nitrogen inlet, and a temperature probe.
- Flame-dry the glassware under vacuum and backfill with Nitrogen (

© 2026 BenchChem. All rights reserved.

) to ensure anhydrous conditions. Moisture kills the reaction rate by solvating the nucleophile.

Step 2: Deprotonation & Addition

- Charge the flask with 4-Methoxyphenol (1.0 equiv) and anhydrous DMF (concentration ~0.5 M).
- Add Potassium Carbonate (2.0 equiv) and Potassium Iodide (0.1 equiv) in a single portion.
- Stir at room temperature for 30 minutes. The solution will likely turn heterogeneous (suspension).
  - Observation: A slight color change (light pink/brown) is normal due to trace phenoxide oxidation.
- Add 2-Ethylhexyl bromide (1.2 equiv) via syringe or addition funnel over 10 minutes.

Step 3: Reaction & Monitoring

- Heat the mixture to 90°C.
  - Why 90°C? Lower temperatures result in sluggish kinetics due to the

    -branching of the alkyl chain. Higher temperatures (>120°C) increase the risk of O-alkylation vs C-alkylation side reactions (though rare with carbonates) and DMF decomposition.
- Monitor via TLC (Hexane:Ethyl Acetate 9:1).
  - Target: Disappearance of 4-Methoxyphenol (

) and appearance of the product (

).
  - Stain: Use $KMnO_4$ or Iodine chamber (UV active, but alkyl chain shows well with Iodine).
- Typical reaction time: 12–16 hours.

© 2026 BenchChem. All rights reserved.

Step 4: Workup

- Cool the mixture to room temperature.
- Filter the solids (excess K_2CO_3 and KBr salts) through a celite pad. Rinse the pad with Ethyl Acetate.
- Critical Wash: Pour the filtrate into a separatory funnel containing Water (5x volume of DMF).
  - Note: DMF is highly water-soluble. A large excess of water forces the organic product out of the DMF phase.
- Extract with Ethyl Acetate or Diethyl Ether (3x).
- Wash the combined organic layers with:
  - 1M NaOH (2x) – Removes unreacted phenol.
  - Water (2x) – Removes residual DMF.
  - Brine (1x) – Dries the organic layer.
- Dry over anhydrous $MgSO_4$, filter, and concentrate under reduced pressure (Rotovap).

Step 5: Purification

For high-purity applications (e.g., polymer synthesis), simple extraction is insufficient.

- Vacuum Distillation: The product is a high-boiling oil.
  - Boiling Point: ~160–165°C at 0.5 mmHg (approximate).
  - Collect the main fraction as a clear, colorless to pale yellow oil.
- Alternative (Small Scale): Column chromatography using Hexane:DCM (gradient 100:0 to 80:20).

Process Logic & Workflow

© 2026 BenchChem. All rights reserved.

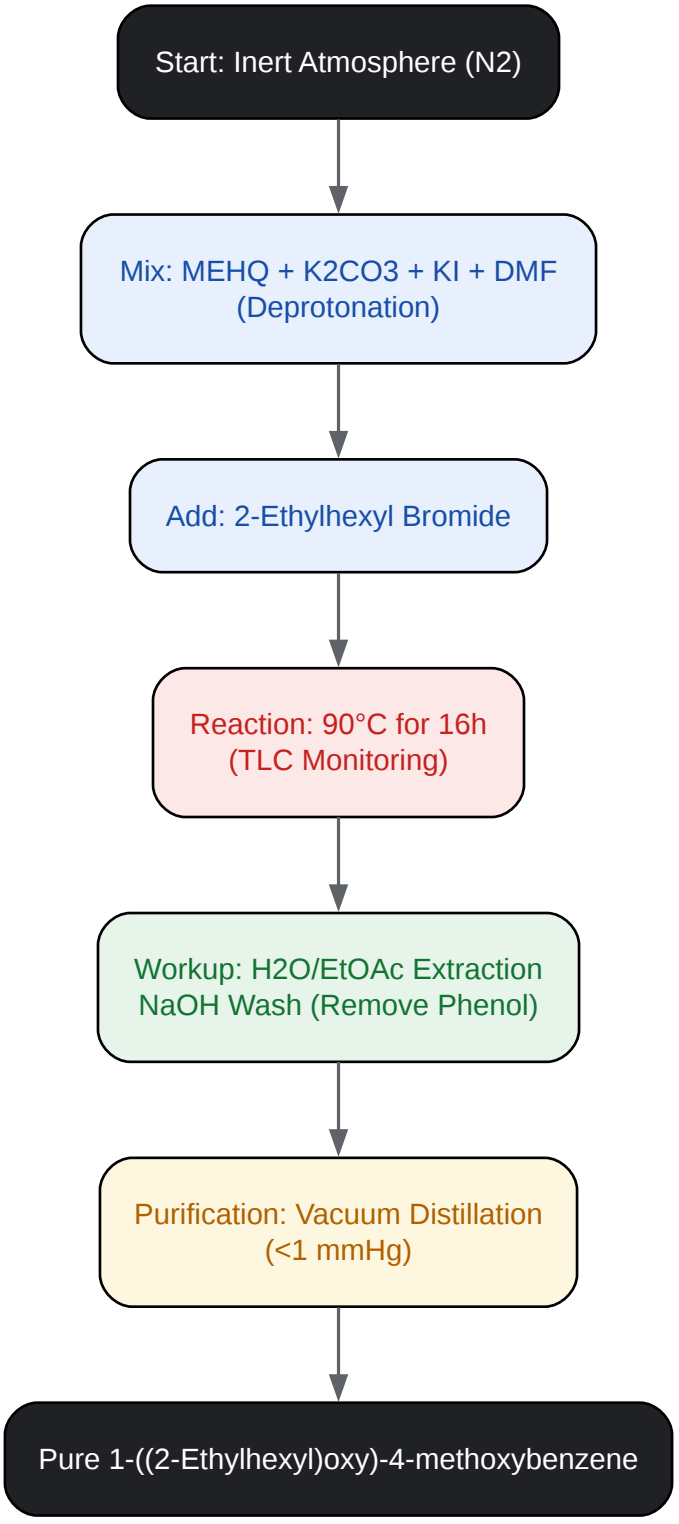

Click to download full resolution via product page

Figure 2: Operational workflow from setup to isolation.

© 2026 BenchChem. All rights reserved.

Characterization & Validation

To validate the synthesis, compare spectral data against the following expected values:

- Physical State: Colorless to pale yellow viscous liquid.
- Refractive Index ( ): ~1.496.[2]
- ^{1}H NMR (400 MHz, $CDCl_3$):
  - 6.83 (s, 4H, Aromatic H) – Characteristic para-substitution pattern.
  - 3.80 (d, J=5.8 Hz, 2H, -OCH_2-) – Doublet indicates the ether CH2 is next to a CH.
  - 3.77 (s, 3H, -OCH_3) – Methoxy singlet.
  - 1.70 (m, 1H, Methine CH)
  - 1.3–1.5 (m, 8H, Alkyl chain)
  - 0.90 (t, 6H, Methyl groups)
- ^{13}C NMR:
  - Expected peaks at ~153.8, 153.5 (Aromatic C-O), 115.4, 114.6 (Aromatic C-H), 71.0 (O-CH2), 55.7 (O-CH3).

Troubleshooting Guide

© 2026 BenchChem. All rights reserved.

Issue	Probable Cause	Corrective Action
Low Conversion	Wet Solvent	DMF is hygroscopic. Water solvates the carbonate, killing basicity. Use fresh anhydrous DMF or add molecular sieves.
Dark Brown Color	Oxidation	4-Methoxyphenol oxidizes easily. Ensure strict atmosphere. Add a pinch of sodium dithionite during workup to reduce quinones.
Emulsion in Workup	DMF Presence	DMF stabilizes emulsions. Wash with more water first, or use brine earlier.
Product Impure	Unreacted Bromide	The bromide has a high boiling point. Ensure full conversion (longer time/more KI) or use high-vacuum distillation to separate.

References

- Sigma-Aldrich. (n.d.).[3] 1-[(2-Ethylhexyl)oxy]-4-methoxybenzene Product Information. Retrieved from [2]
- Master Organic Chemistry. (2014). The Williamson Ether Synthesis: Mechanism and Conditions. Retrieved from
- National Center for Biotechnology Information. (2023). PubChem Compound Summary for CID 3341005, **1-((2-Ethylhexyl)oxy)-4-methoxybenzene**. Retrieved from [4]
- Karastatiris, P., et al. (2008). Bipolar poly(p-phenylene vinylene)s bearing electron-donating triphenylamine...[2]. Journal of Polymer Science Part A. (Cited for context on MEH-PPV precursor synthesis). Retrieved from

© 2026 BenchChem. All rights reserved.

Need Custom Synthesis?

BenchChem offers custom synthesis for rare earth carbides and specific isotopiclabeling.

Email: info@benchchem.com or Request Quote Online.

Sources

- 1. jk-sci.com [jk-sci.com]
- 2. 1-[(2-乙基己基)氧]-4-甲氧基苯 | Sigma-Aldrich [sigmaaldrich.com]
- 3. 对甲氧基肉桂酸乙基己酯 98% | Sigma-Aldrich [sigmaaldrich.com]
- 4. 1-((2-Ethylhexyl)oxy)-4-methoxybenzene | C15H24O2 | CID 3341005 - PubChem [pubchem.ncbi.nlm.nih.gov]
- To cite this document: BenchChem. [Technical Application Note: Scalable Synthesis of 1-((2-Ethylhexyl)oxy)-4-methoxybenzene]. BenchChem, [2026]. [Online PDF]. Available at: [https://www.benchchem.com/product/b126864/docs#technical-application-note-scalable-synthesis-of-1-2-ethylhexyl-oxy-4-methoxybenzene]

Disclaimer & Data Validity:

The information provided in this document is for Research Use Only (RUO) and is strictly not intended for diagnostic or therapeutic procedures. While BenchChem strives to provide accurate protocols, we make no warranties, express or implied, regarding the fitness of this product for every specific experimental setup.

Technical Support: The protocols provided are for reference purposes. Unsure if this reagent suits your experiment?

Need Industrial/Bulk Grade? Request Custom Synthesis Quote

© 2026 BenchChem. All rights reserved.

BenchChem

Our mission is to be the trusted global source of essential and advanced chemicals, empowering scientists and researchers to drive progress in science and industry.

Contact

Address: 3281 E Guasti Rd

Ontario, CA 91761, United States

Phone: (601) 213-4426

Email: info@benchchem.com

Contact our Ph.D. Support Team for a compatibility check

© 2026 BenchChem. All rights reserved.