How to control for vehicle effects in SR-4995 studies

Author: BenchChem Technical Support Team. **Date**: April 2026

Compound of Interest

Compound Name: *SR-4995*

Cat. No.: *B1256982*

Get Quote

Technical Support Center: SR-4995 Studies

This technical support center provides guidance for researchers, scientists, and drug development professionals on the proper use of vehicle controls in experiments involving **SR-4995**. Adherence to these guidelines is crucial for generating accurate and reproducible data.

Frequently Asked Questions (FAQs)

Q1: What is a vehicle control, and why is it essential for **SR-4995** experiments?

A vehicle control is a sample that contains the solvent or carrier used to dissolve and deliver **SR-4995**, but not the compound itself.[1] It is a critical experimental control used to distinguish the pharmacological effects of **SR-4995** from any potential biological effects of the vehicle.[2] For example, if **SR-4995** is dissolved in DMSO, the vehicle control group would be treated with the exact same concentration of DMSO as the experimental group.[1] This ensures that any observed changes in the experimental group are attributable to **SR-4995** and not the solvent.[1][2]

Q2: What is the recommended vehicle for in vitro studies with **SR-4995**?

© 2026 BenchChem. All rights reserved.

Based on its physicochemical properties, Dimethyl Sulfoxide (DMSO) is the recommended vehicle for in vitro studies. **SR-4995** is a powder that is soluble in DMSO at a concentration of 2 mg/mL.[3][4][5]

Q3: What is the maximum recommended concentration of DMSO for cell-based assays?

While **SR-4995** is soluble in DMSO, it is crucial to minimize the final concentration of DMSO in the cell culture medium to avoid solvent-induced artifacts or cytotoxicity. A final concentration of 0.1% DMSO is commonly used in adipocyte studies with **SR-4995** and is a good starting point.[6] As a general rule, the final DMSO concentration in cell-based assays should not exceed 1%.[7]

Q4: How should I select a vehicle for in vivo studies with **SR-4995**?

Selecting an in vivo vehicle requires careful consideration of the route of administration, the required dose, and the tolerability of the vehicle in the chosen animal model.[8][9] Factors to consider include:

- Solubility: The vehicle must keep **SR-4995** solubilized at the desired concentration.
- Toxicity: The vehicle itself should be non-toxic and have no confounding biological effects at the administered volume.[10]
- Route of Administration: Different routes (e.g., oral, intravenous, intraperitoneal) require different formulation strategies.[11] Common in vivo vehicles include aqueous solutions (like saline), suspensions (using agents like carboxymethylcellulose), and co-solvent systems (e.g., mixtures containing PEG-400, PG, or DMSO).[10] A "tool belt" of multiple formulation options is often necessary for poorly soluble compounds.[9][12]

Q5: What is the mechanism of action for **SR-4995**?

SR-4995 is a potent and selective ligand of α-β-hydrolase domain containing 5 (ABHD5).[3][5] It activates adipose triglyceride lipase (ATGL) by directly binding to ABHD5 and causing its dissociation from inhibitory proteins like perilipin-1 (PLIN1) and PLIN5.[3][5][6] This mechanism of inducing lipolysis is distinct from and independent of the canonical PKA-dependent signaling pathway.[6][13]

© 2026 BenchChem. All rights reserved.

Troubleshooting Guide

Problem: The vehicle control group shows unexpected biological effects (e.g., cytotoxicity, altered gene expression, or signaling changes).

This is a common issue that can compromise the validity of an experiment. The goal is for the vehicle control response to be statistically indistinguishable from the negative (untreated) control.[2]

© 2026 BenchChem. All rights reserved.

Possible Cause	Troubleshooting Steps
Vehicle Concentration is Too High	High concentrations of solvents like DMSO can be toxic to cells.[7] Solution: Perform a dose-response experiment with the vehicle alone to determine its No-Observed-Adverse-Effect Level (NOAEL). Reduce the final concentration in your experiments to well below this level.
Inherent Vehicle Toxicity	The chosen vehicle may have inherent biological effects on your specific cell type or animal model. For example, vehicles like PEG-400 and propylene glycol (PG) have been shown to cause motor impairment in mice.[10] Solution: Test a panel of alternative vehicles to find one that is inert in your system. Consult literature for vehicles that have been successfully used in similar models.[14]
Vehicle-Media Interaction	The vehicle may interact with components in the cell culture medium or serum, leading to degradation products or precipitates that affect the cells. Solution: Prepare the final dilution of the vehicle in media immediately before adding it to the cells. Visually inspect for any precipitation.
Vehicle Purity and Stability	The vehicle itself may be contaminated or may have degraded over time. Solution: Use a high-purity, sterile-filtered vehicle from a reputable supplier. Store it according to the manufacturer's instructions and avoid repeated freeze-thaw cycles.

Data Presentation

Table 1: Physicochemical Properties of **SR-4995**

© 2026 BenchChem. All rights reserved.

Property	Value	Source(s)
Molecular Weight	355.45 g/mol	[4][5]
CAS Number	891509-95-8	[3][5]
Form	Powder	[3][4]
Color	White to beige	[3][4]
Solubility	DMSO: 2 mg/mL	[3][4][5]
Storage Temperature	-20°C	[3][4]

Table 2: Common Vehicles for Preclinical Research

Vehicle	Common Use	Potential Issues	Source(s)
Saline (0.9% NaCl)	In vivo (IV, IP, SC, PO)	Poor solubility for hydrophobic compounds.	[10]
DMSO	In vitro stock solutions; In vivo (often in co-solvent mixtures)	Can be toxic at concentrations >1% in vitro; can cause motor impairment in vivo at high doses.	[7][10]
Carboxymethylcellulose (CMC)	In vivo oral suspensions	Can affect gastrointestinal motility.	[10]
Polyethylene Glycol 400 (PEG-400)	In vivo oral solutions/co-solvent	Can have neurological effects and cause motor impairment.	[10]
Propylene Glycol (PG)	In vivo oral solutions/co-solvent	Can have neurological effects and cause motor impairment.	[10]

© 2026 BenchChem. All rights reserved.

Experimental Protocols

Protocol 1: Preparation of **SR-4995** and Vehicle Controls for In Vitro Assays

- Prepare a 10 mM **SR-4995** Stock Solution:
  - **SR-4995** Molecular Weight = 355.45 g/mol .
  - Weigh out 3.55 mg of **SR-4995** powder.
  - Dissolve in 1 mL of high-purity, sterile DMSO to create a 10 mM stock solution.
  - Aliquot into small volumes to avoid repeated freeze-thaw cycles and store at -20°C, protected from light.[5]
- Prepare Experimental Solutions:
  - Thaw an aliquot of the 10 mM **SR-4995** stock solution.
  - Perform serial dilutions in cell culture medium to achieve the desired final concentrations for your experiment (e.g., 1 µM, 10 µM, 20 µM).
  - Crucially, ensure the final DMSO concentration is identical across all treatment groups and the vehicle control.
- Prepare the Vehicle Control:
  - Calculate the highest percentage of DMSO present in any of your **SR-4995** treatment wells. For example, if your highest drug concentration (e.g., 20 µM) was made by a 1:500 dilution from the 10 mM stock, the final DMSO concentration is 0.2%.
  - Prepare the vehicle control by adding the same volume of pure DMSO to the same volume of media used for the drug dilutions. In this example, you would add 2 µL of DMSO to 998 µL of media to create a 0.2% DMSO vehicle control.
- Experimental Setup:
  - Include the following groups in your assay:

© 2026 BenchChem. All rights reserved.

- Negative Control: Cells treated with medium only (no DMSO).
- Vehicle Control: Cells treated with the medium containing the final concentration of DMSO.
- Experimental Groups: Cells treated with **SR-4995** at various concentrations.
- Positive Control: Cells treated with a compound known to elicit the expected response (e.g., isoproterenol for lipolysis).[6]

Visualizations

© 2026 BenchChem. All rights reserved.

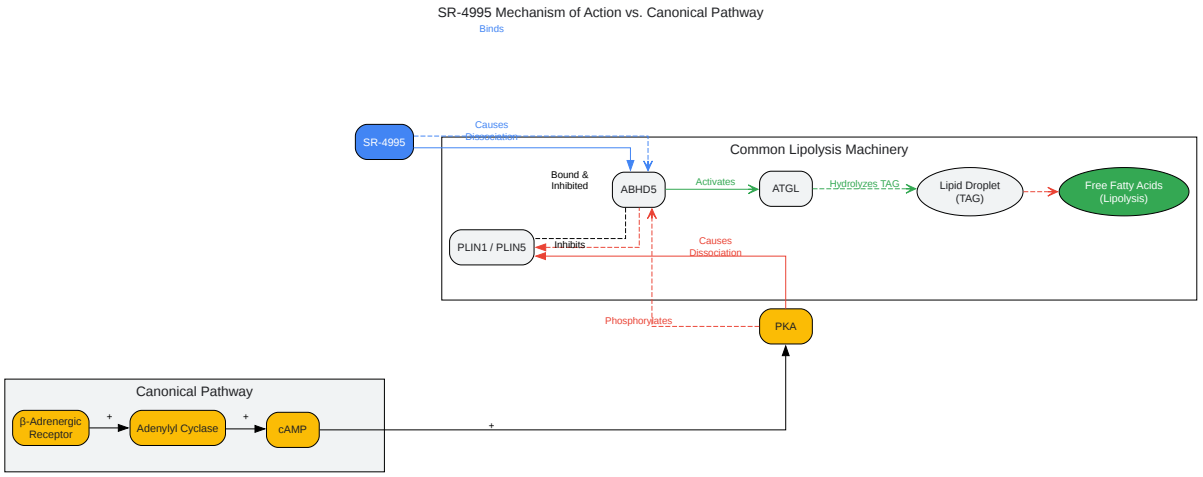

Click to download full resolution via product page

Caption: **SR-4995** induces lipolysis by directly binding ABHD5, bypassing PKA signaling.

© 2026 BenchChem. All rights reserved.

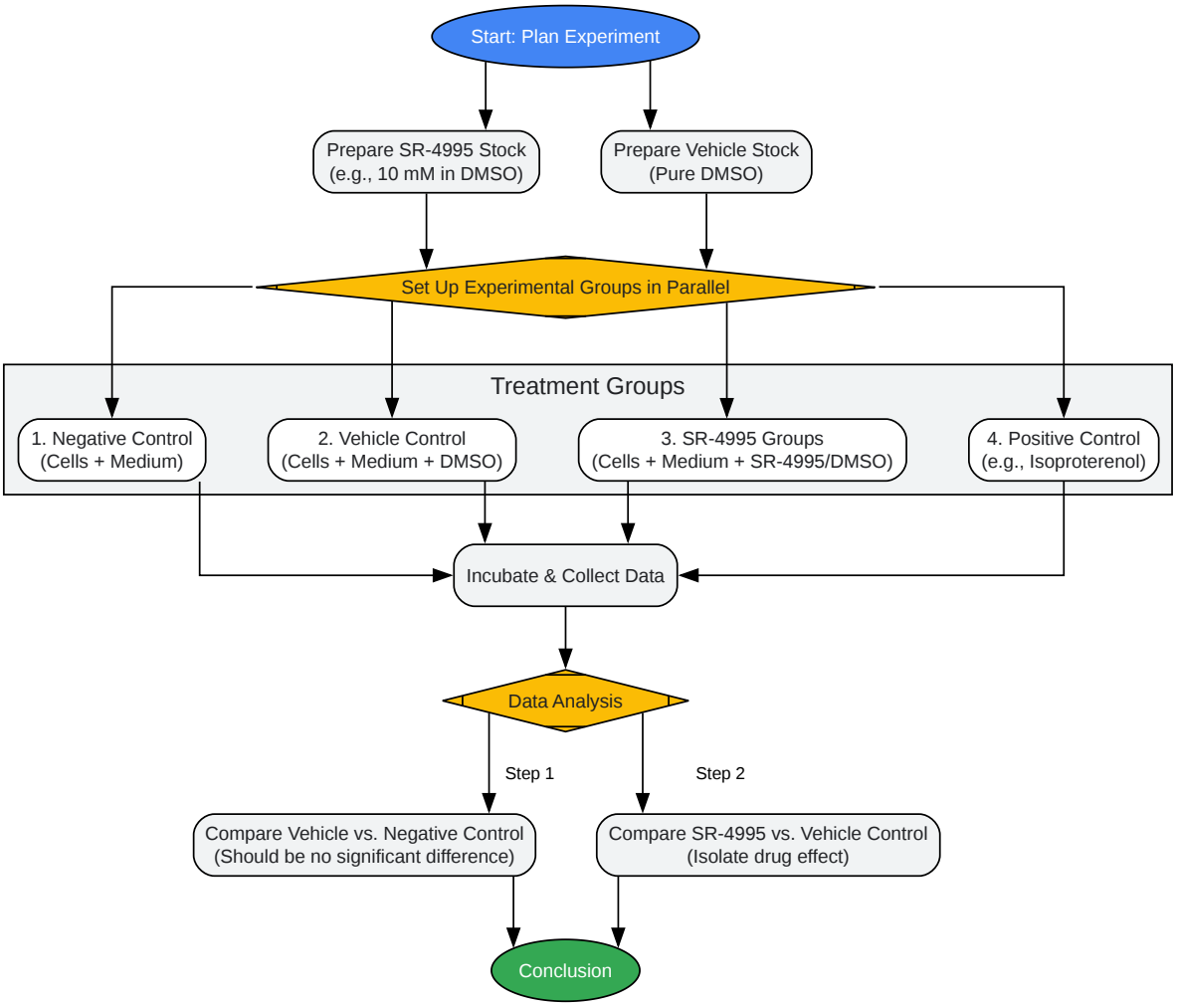

Click to download full resolution via product page

Caption: Workflow for experiments using **SR-4995** with appropriate vehicle controls.

© 2026 BenchChem. All rights reserved.

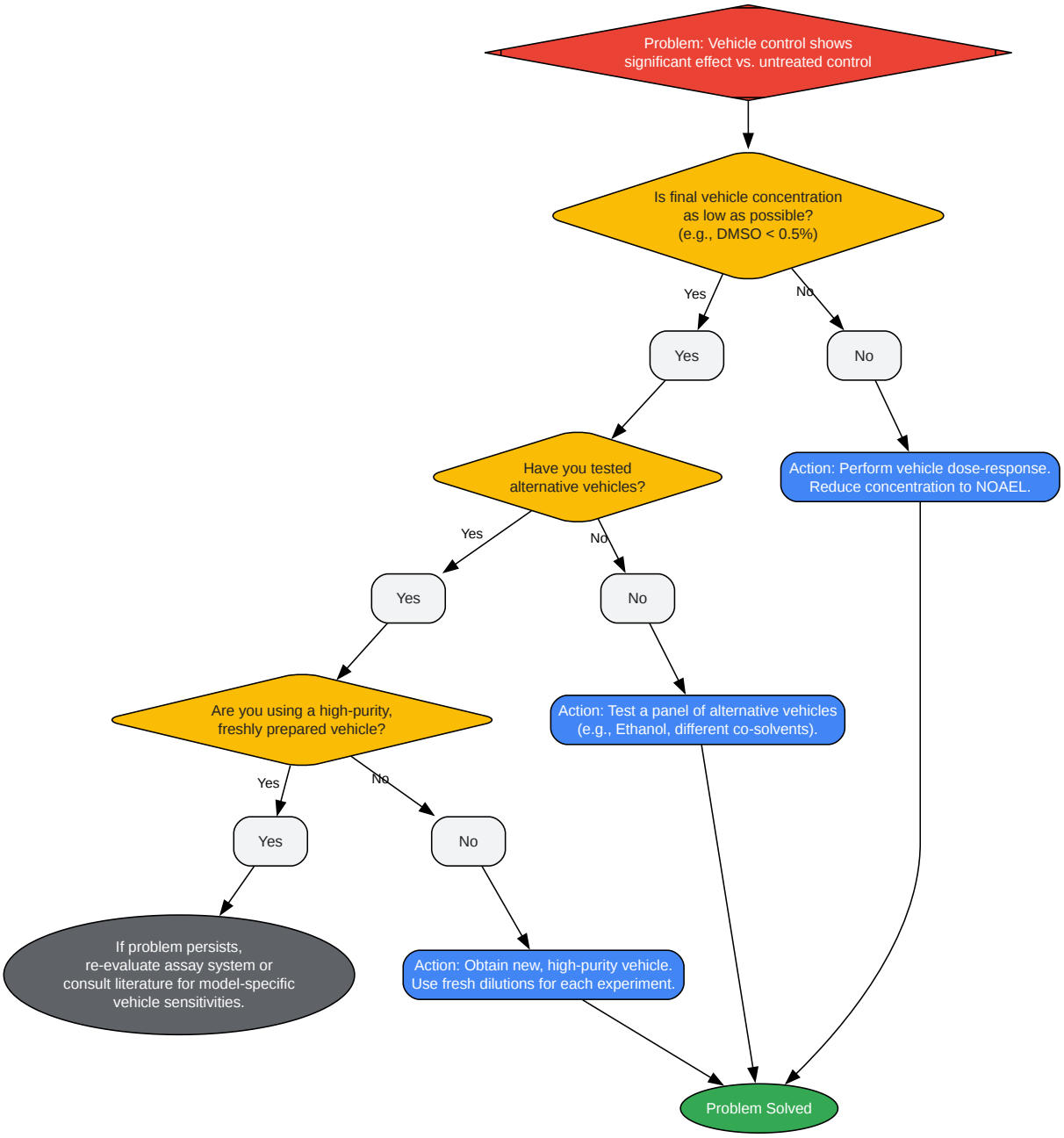

Click to download full resolution via product page

Caption: Decision tree for troubleshooting unexpected effects in vehicle controls.

© 2026 BenchChem. All rights reserved.

Need Custom Synthesis?

BenchChem offers custom synthesis for rare earth carbides and specific isotopiclabeling.

Email: info@benchchem.com or Request Quote Online.

References

- 1. Vehicle control: Significance and symbolism [wisdomlib.org]
- 2. Controlling your High Content Assays - Araceli Biosciences [aracelibio.com]
- 3. SR-4995 = 98 HPLC 891509-95-8 [sigmaaldrich.com]
- 4. ≥98% (HPLC), adipose triglyceride lipase(ATGL) activator, powder | Sigma-Aldrich [sigmaaldrich.com]
- 5. abmole.com [abmole.com]
- 6. Novel Pharmacological Probes Reveal ABHD5 as a Locus of Lipolysis Control in White and Brown Adipocytes - PMC [pmc.ncbi.nlm.nih.gov]
- 7. researchgate.net [researchgate.net]
- 8. altasciences.com [altasciences.com]
- 9. Vehicle selection for nonclinical oral safety studies - PubMed [pubmed.ncbi.nlm.nih.gov]
- 10. researchgate.net [researchgate.net]
- 11. altasciences.com [altasciences.com]
- 12. researchgate.net [researchgate.net]
- 13. researchgate.net [researchgate.net]
- 14. gadconsulting.com [gadconsulting.com]
- To cite this document: BenchChem. [How to control for vehicle effects in SR-4995 studies]. BenchChem, [2026]. [Online PDF]. Available at: [https://www.benchchem.com/product/b1256982/docs#how-to-control-for-vehicle-effects-in-sr-4995-studies]

Disclaimer & Data Validity:

The information provided in this document is for Research Use Only (RUO) and is strictly not intended for diagnostic or therapeutic procedures. While BenchChem strives to provide

accurate protocols, we make no warranties, express or implied, regarding the fitness of this product for every specific experimental setup.

Technical Support: The protocols provided are for reference purposes. Unsure if this reagent suits your experiment?

Need Industrial/Bulk Grade? Request Custom Synthesis Quote

BenchChem

Our mission is to be the trusted global source of essential and advanced chemicals, empowering scientists and researchers to drive progress in science and industry.

Contact

Address: 3281 E Guasti Rd

Ontario, CA 91761, United States

Phone: (601) 213-4426

Email: info@benchchem.com

Contact our Ph.D. Support Team for a compatibility check

© 2026 BenchChem. All rights reserved.