Wilforgine vs. Synthetic Analogs: A Comparative Analysis for Drug Development Professionals

Author: BenchChem Technical Support Team. **Date**: April 2026

Compound of Interest

Compound Name:	*Wilforgine (Standard)*
Cat. No.:	*B1255582*

Get Quote

A deep dive into the therapeutic potential of Wilforgine, a sesquiterpene pyridine alkaloid derived from the medicinal plant Tripterygium wilfordii, and an exploration of the prospects for its synthetic analogs in drug discovery.

Introduction

Wilforgine, a complex natural product isolated from the roots of Tripterygium wilfordii (the "Thunder God Vine"), has garnered significant interest within the scientific community for its potent anti-inflammatory and anticancer properties.[1] As a member of the sesquiterpene pyridine alkaloid family, its intricate structure presents both a promising scaffold for therapeutic development and a considerable challenge for synthetic chemists. This guide provides a comparative analysis of Wilforgine's biological activities and discusses the potential for the development of synthetic analogs to overcome the limitations of the natural product, such as toxicity and bioavailability.

Biological Activities of Wilforgine

Wilforgine exhibits a range of biological activities, with its anti-inflammatory and cytotoxic effects being the most extensively studied. These activities stem from its ability to modulate key cellular signaling pathways involved in inflammation and cell proliferation.

© 2026 BenchChem. All rights reserved.

Anti-inflammatory Activity

Wilforgine has demonstrated significant anti-inflammatory properties, primarily through the inhibition of pro-inflammatory mediators. Its mechanism of action is linked to the suppression of signaling pathways such as the Wnt/β-catenin and NF-κB pathways.[2][3]

Anticancer Activity

The cytotoxic effects of Wilforgine against various cancer cell lines have been documented, suggesting its potential as an anticancer agent.[1] While specific IC50 values for Wilforgine are not extensively reported in readily available literature, the broader class of compounds from Tripterygium wilfordii shows potent activity. For context, other compounds from this plant have been evaluated for their cytotoxicity.[4][5]

Quantitative Data Summary

Due to the limited availability of direct comparative studies between Wilforgine and its synthetic analogs, this section presents available quantitative data for Wilforgine's biological activities to serve as a benchmark for future analog development.

Biological Activity	Assay	Cell Line/Model	Metric	Value	Reference
Anti-inflammatory	Nitric Oxide (NO) Production	LPS-stimulated RAW 264.7 macrophages	IC50	Data not available	
Anti-inflammatory	IL-6 Production	LPS-stimulated RAW 264.7 macrophages	IC50	Data not available	
Anticancer	Cytotoxicity	Various Cancer Cell Lines	IC50	Data not available	[1]

© 2026 BenchChem. All rights reserved.

Note: Specific IC50 values for Wilforgine are not readily available in the reviewed literature. The table is presented as a template for future comparative studies.

Signaling Pathways and Mechanisms of Action

Wilforgine exerts its biological effects by modulating critical intracellular signaling pathways.

Wnt/β-catenin Signaling Pathway

Wilforine, a closely related compound, has been shown to inhibit the Wnt/β-catenin signaling pathway, which is often dysregulated in inflammatory diseases and cancer.[2] It is plausible that Wilforgine acts through a similar mechanism. Inhibition of this pathway leads to a decrease in the nuclear translocation of β-catenin and subsequent downregulation of target genes involved in cell proliferation and inflammation.

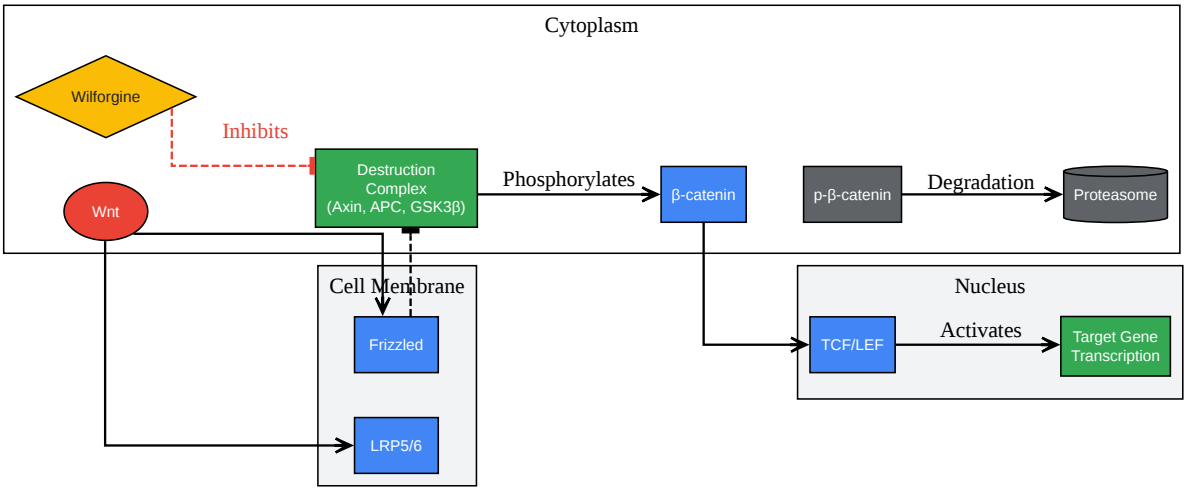

Click to download full resolution via product page

Caption: The Wnt/β-catenin signaling pathway and the inhibitory role of Wilforgine.

© 2026 BenchChem. All rights reserved.

NF-κB Signaling Pathway

Compounds from Tripterygium wilfordii are known to suppress the NF-κB signaling pathway, a key regulator of the inflammatory response.[3][6] By inhibiting this pathway, these compounds can reduce the expression of pro-inflammatory genes, such as those encoding cytokines and chemokines.

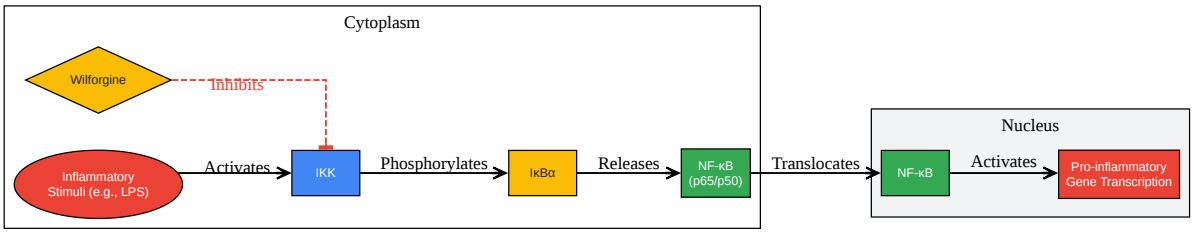

Click to download full resolution via product page

Caption: The NF-κB signaling pathway and the inhibitory role of Wilforgine.

Experimental Protocols

Detailed methodologies are crucial for the reproducible evaluation of Wilforgine and its future synthetic analogs.

Cytotoxicity Assay (MTT Assay)

This colorimetric assay measures the metabolic activity of cells as an indicator of cell viability.

Materials:

- 96-well plates
- Cell culture medium

© 2026 BenchChem. All rights reserved.

- Wilforgine or synthetic analog (dissolved in a suitable solvent, e.g., DMSO)
- MTT (3-(4,5-dimethylthiazol-2-yl)-2,5-diphenyltetrazolium bromide) solution (5 mg/mL in PBS)
- Solubilization solution (e.g., DMSO or a solution of SDS in HCl)
- Microplate reader

Procedure:

- Seed cells in a 96-well plate at a predetermined density and allow them to adhere overnight.
- Treat the cells with various concentrations of the test compound and a vehicle control.
- Incubate for a specified period (e.g., 24, 48, or 72 hours).
- Add MTT solution to each well and incubate for 2-4 hours at 37°C.
- Remove the medium and add the solubilization solution to dissolve the formazan crystals.
- Measure the absorbance at a wavelength of 570 nm using a microplate reader.
- Calculate the percentage of cell viability relative to the vehicle control and determine the IC50 value.[7][8][9][10]

Anti-inflammatory Assay (Nitric Oxide Production)

This assay quantifies the production of nitric oxide (NO), a key inflammatory mediator, by macrophages.

Materials:

- RAW 264.7 macrophage cells
- 96-well plates
- Cell culture medium

© 2026 BenchChem. All rights reserved.

- Lipopolysaccharide (LPS)
- Wilforgine or synthetic analog
- Griess reagent (Part A: sulfanilamide in phosphoric acid; Part B: N-(1-naphthyl)ethylenediamine dihydrochloride in water)
- Sodium nitrite standard solution
- Microplate reader

Procedure:

- Seed RAW 264.7 cells in a 96-well plate and allow them to adhere.
- Pre-treat the cells with various concentrations of the test compound for 1 hour.
- Stimulate the cells with LPS (e.g., 1 µg/mL) and incubate for 24 hours.
- Collect the cell culture supernatant.
- Mix the supernatant with an equal volume of Griess reagent.
- Measure the absorbance at 540 nm.
- Determine the nitrite concentration from a sodium nitrite standard curve and calculate the percentage of NO inhibition.[11][12][13][14][15]

© 2026 BenchChem. All rights reserved.

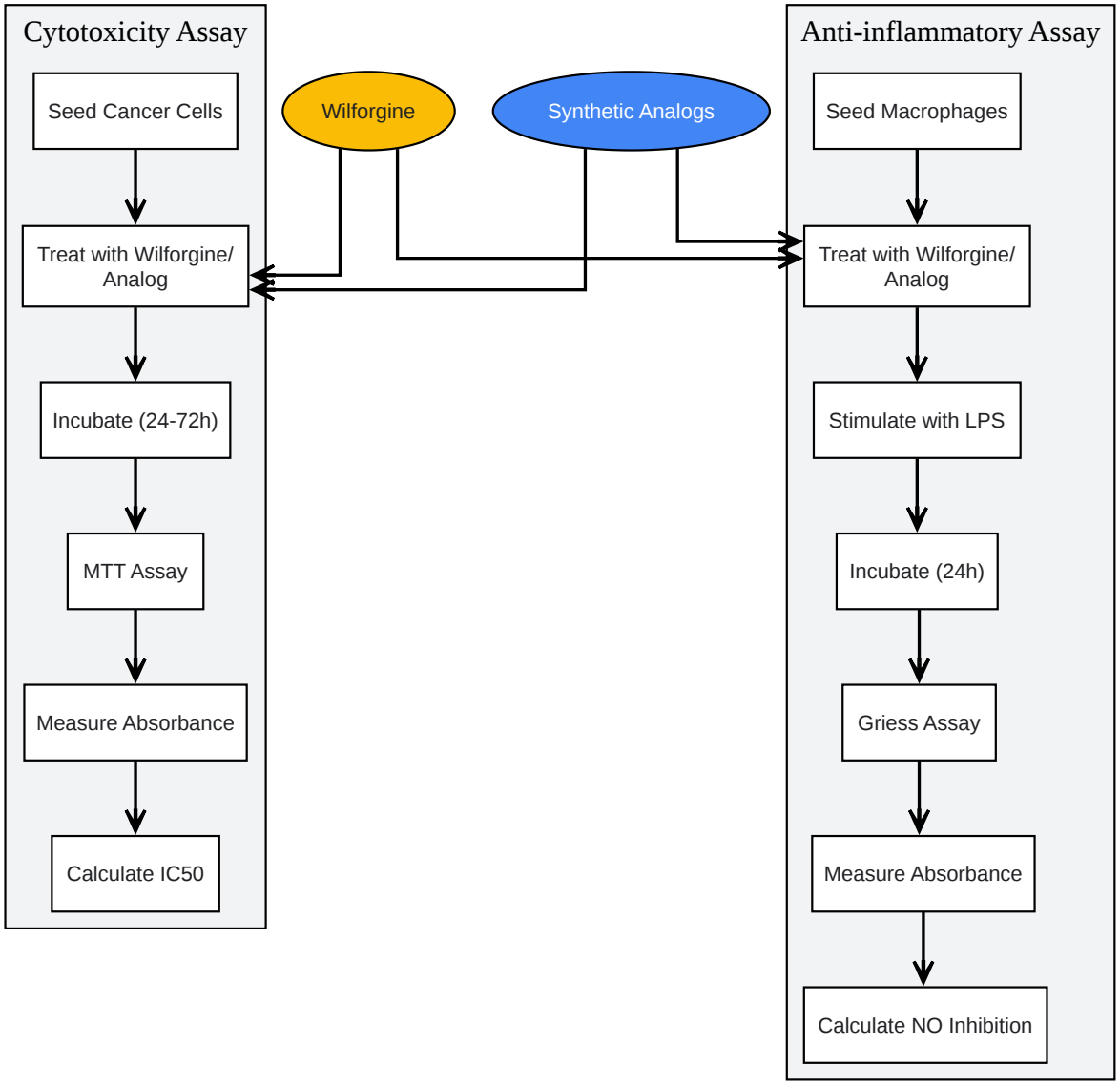

Click to download full resolution via product page

Caption: Experimental workflow for evaluating Wilforgine and its synthetic analogs.

Prospects for Synthetic Analogs

© 2026 BenchChem. All rights reserved.

The development of synthetic analogs of Wilforgine is a promising strategy to address the challenges associated with the natural product, including its potential toxicity and limited availability. By modifying the chemical structure of Wilforgine, it may be possible to enhance its therapeutic index and improve its pharmacokinetic properties.

Key areas for synthetic modification could include:

- Modification of the pyridine ring: Altering the substituents on the pyridine ring could modulate the compound's polarity and its interactions with biological targets.
- Alteration of the ester groups: The nature of the ester groups on the sesquiterpene core is known to be important for the activity of related compounds. Synthesis of analogs with different ester functionalities could lead to improved potency and selectivity.
- Simplification of the macrocyclic structure: The complex macrocyclic lactone structure of Wilforgine presents a significant synthetic challenge. The development of simplified analogs that retain the key pharmacophoric features could facilitate large-scale production.

Conclusion

Wilforgine is a promising natural product with potent anti-inflammatory and anticancer activities. While the lack of direct comparative data with synthetic analogs currently limits a full assessment, the information presented in this guide provides a solid foundation for future research and development. The detailed experimental protocols and an understanding of the key signaling pathways involved will be invaluable for the design and evaluation of novel Wilforgine analogs with improved therapeutic potential. The continued exploration of this fascinating molecule and its synthetic derivatives holds significant promise for the discovery of new treatments for a range of human diseases.

Need Custom Synthesis?

BenchChem offers custom synthesis for rare earth carbides and specific isotopiclabeling.

Email: info@benchchem.com or Request Quote Online.

References

- 1. Structural diversity and biological activities of terpenoids derived from Tripterygium wilfordii Hook. f - PMC [pmc.ncbi.nlm.nih.gov]
- 2. Wilforine inhibits rheumatoid arthritis pathology through the Wnt11/β-catenin signaling pathway axis - PMC [pmc.ncbi.nlm.nih.gov]
- 3. Triptolide Suppresses NF-κB-Mediated Inflammatory Responses and Activates Expression of Nrf2-Mediated Antioxidant Genes to Alleviate Caerulein-Induced Acute Pancreatitis - PubMed [pubmed.ncbi.nlm.nih.gov]
- 4. Screening for Selective Anticancer Activity of 65 Extracts of Plants Collected in Western Andalusia, Spain - PMC [pmc.ncbi.nlm.nih.gov]
- 5. An Investigation of the Growth Inhibitory Capacity of Several Medicinal Plants From Iran on Tumor Cell Lines - PMC [pmc.ncbi.nlm.nih.gov]
- 6. Downregulating NF-κB signaling pathway with triterpenoids for attenuating inflammation: in vitro and in vivo studies - PubMed [pubmed.ncbi.nlm.nih.gov]
- 7. merckmillipore.com [merckmillipore.com]
- 8. Cytotoxicity MTT Assay Protocols and Methods | Springer Nature Experiments [experiments.springernature.com]
- 9. broadpharm.com [broadpharm.com]
- 10. CyQUANT MTT Cell Proliferation Assay Kit Protocol | Thermo Fisher Scientific - US [thermofisher.com]
- 11. youtube.com [youtube.com]
- 12. mjas.analis.com.my [mjas.analis.com.my]
- 13. Nitric Oxide Synthesis Inhibition and Anti-Inflammatory Effect of Polypeptide Isolated from Chicken Feather Meal in Lipopolysaccharide-Stimulated RAW 264.7 Macrophages - PMC [pmc.ncbi.nlm.nih.gov]
- 14. Inhibition of nitric oxide production in LPS-stimulated RAW 264.7 cells by stem bark of Ulmus pumila L - PMC [pmc.ncbi.nlm.nih.gov]
- 15. pdfs.semanticscholar.org [pdfs.semanticscholar.org]

- To cite this document: BenchChem. [Wilforgine vs. Synthetic Analogs: A Comparative Analysis for Drug Development Professionals]. BenchChem, [2026]. [Online PDF]. Available at: [https://www.benchchem.com/product/b1255582/docs#wilforgine-vs-synthetic-analogs-a-comparative-analysis-for-drug-development-professionals]

Disclaimer & Data Validity:

© 2026 BenchChem. All rights reserved.

The information provided in this document is for Research Use Only (RUO) and is strictly not intended for diagnostic or therapeutic procedures. While BenchChem strives to provide accurate protocols, we make no warranties, express or implied, regarding the fitness of this product for every specific experimental setup.

Technical Support: The protocols provided are for reference purposes. Unsure if this reagent suits your experiment?

Need Industrial/Bulk Grade? Request Custom Synthesis Quote

BenchChem

Our mission is to be the trusted global source of essential and advanced chemicals, empowering scientists and researchers to drive progress in science and industry.

Contact

Address: 3281 E Guasti Rd

Ontario, CA 91761, United States

Phone: (601) 213-4426

Email: info@benchchem.com

Contact our Ph.D. Support Team for a compatibility check

© 2026 BenchChem. All rights reserved.