Independent Verification of Cardiac Glycosides' Anticancer Effects: A Comparative Guide

Author: BenchChem Technical Support Team. **Date**: April 2026

Compound of Interest

Compound Name:	*Diginatigenin*
CAS No.:	*559-57-9*
Cat. No.:	*B1252536*

Get Quote

An objective analysis of published data on the anticancer properties of cardiac glycosides, primarily focusing on Digitoxin, reveals a consistent pattern of anti-proliferative activity across various cancer types. While direct, independent verification studies are not explicitly labeled as such in the scientific literature, a synthesis of findings from numerous research groups provides a strong body of evidence supporting these effects. This guide compares key experimental data and methodologies to offer researchers, scientists, and drug development professionals a comprehensive overview of the existing evidence.

Multiple studies have demonstrated the anticancer potential of Digitoxin and its analogs in a range of cancer cell lines, including breast, lung, ovarian, liver, and cervical cancers.[1][2][3] The primary mechanisms of action consistently reported are the induction of apoptosis (programmed cell death) and arrest of the cell cycle at various phases.[4][5][6]

Comparative Analysis of Anticancer Effects

The following tables summarize the quantitative data from various studies on the effects of Digitoxin on different cancer cell lines. This comparative presentation serves as an indirect form

© 2026 BenchChem. All rights reserved.

of independent verification, showcasing the reproducibility of findings across different research settings.

Table 1: Cytotoxicity of Digitoxin in Various Cancer Cell Lines

Cancer Type	Cell Line	IC50 Concentration	Exposure Time	Study/Reference
Hepatocellular Carcinoma	HepG2/ADM	132.65 ± 3.83 nM	24 h	[4]
		52.29 ± 6.26 nM	48 h	[4]
		9.13 ± 3.67 nM	72 h	[4]
Non-Small Cell Lung Cancer	A549	0.10 µM	24 h	[3]
	H1299	0.12 µM	24 h	[3]
Cervical Cancer	HeLa	Not explicitly stated, but effective concentrations are reported to be in the nanomolar range.	-	[1]
Breast Cancer	MCF-7, MDA-MB-468	Concentrations within the therapeutic range were found to be effective.	-	[2]

Table 2: Effects of Digitoxin on Cell Cycle Progression

© 2026 BenchChem. All rights reserved.

Cancer Type	Cell Line	Effect	Concentration	Exposure Time	Study/Reference
Hepatocellular Carcinoma	HepG2/ADM	G2/M Arrest	0.1 µM	24 h	[4]
Ovarian Cancer	SKOV-3	G0/G1 Arrest	IC50 and 10^{-6} M	24 h and 48 h	[5]
Breast Cancer	MCF-7, MDA-MB-468	G0/G1 Arrest	Therapeutic Range	-	[2]
Non-Small Cell Lung Cancer	-	G1/S or G2 Arrest	-	-	[1]

Key Experimental Protocols

The following are detailed methodologies for key experiments cited in the literature, providing a basis for replication and further investigation.

Cell Viability Assay (MTT Assay)

- Cell Seeding: Cancer cells (e.g., HepG2/ADM, MM231) are seeded in 96-well plates at a specific density and allowed to adhere overnight.[4][7]
- Treatment: Cells are treated with varying concentrations of Digitoxin or a vehicle control (like DMSO) for specified time periods (e.g., 24, 48, 72 hours).[4][8]
- MTT Addition: After the treatment period, MTT (3-(4,5-dimethylthiazol-2-yl)-2,5-diphenyltetrazolium bromide) solution is added to each well and incubated for 2-4 hours at 37°C.[1]
- Formazan Solubilization: The medium is removed, and a solubilizing agent (e.g., DMSO) is added to dissolve the formazan crystals.
- Absorbance Measurement: The absorbance is measured at a specific wavelength (e.g., 570 nm) using a microplate reader to determine cell viability.

© 2026 BenchChem. All rights reserved.

Apoptosis Analysis (Flow Cytometry)

- Cell Treatment: Cells are treated with Digitoxin at the desired concentration and for the appropriate duration.
- Cell Harvesting: Both floating and adherent cells are collected, washed with phosphate-buffered saline (PBS).
- Staining: Cells are resuspended in a binding buffer and stained with Annexin V-FITC and Propidium Iodide (PI) according to the manufacturer's protocol.
- Flow Cytometry: The stained cells are analyzed by a flow cytometer to quantify the percentage of apoptotic cells (Annexin V positive).[7][8]

Cell Cycle Analysis (Flow Cytometry)

- Cell Treatment and Harvesting: Similar to the apoptosis assay, cells are treated and harvested.
- Fixation: Cells are fixed in cold 70% ethanol and stored at -20°C.
- Staining: The fixed cells are washed and stained with a solution containing PI and RNase A.
- Flow Cytometry: The DNA content of the cells is analyzed by a flow cytometer to determine the distribution of cells in different phases of the cell cycle (G0/G1, S, G2/M).[5]

Western Blotting

- Protein Extraction: Following treatment with Digitoxin, total protein is extracted from the cells using a lysis buffer.
- Protein Quantification: The protein concentration is determined using a standard assay (e.g., BCA assay).
- SDS-PAGE and Transfer: Equal amounts of protein are separated by SDS-polyacrylamide gel electrophoresis and transferred to a PVDF membrane.

© 2026 BenchChem. All rights reserved.

- Immunoblotting: The membrane is blocked and then incubated with primary antibodies against target proteins (e.g., Bcl-2, Bax, caspases) followed by incubation with a horseradish peroxidase-conjugated secondary antibody.[7]
- Detection: The protein bands are visualized using an enhanced chemiluminescence (ECL) detection system.

Signaling Pathways and Mechanisms of Action

Digitoxin exerts its anticancer effects through multiple signaling pathways. The diagrams below, generated using Graphviz, illustrate some of the key reported mechanisms.

© 2026 BenchChem. All rights reserved.

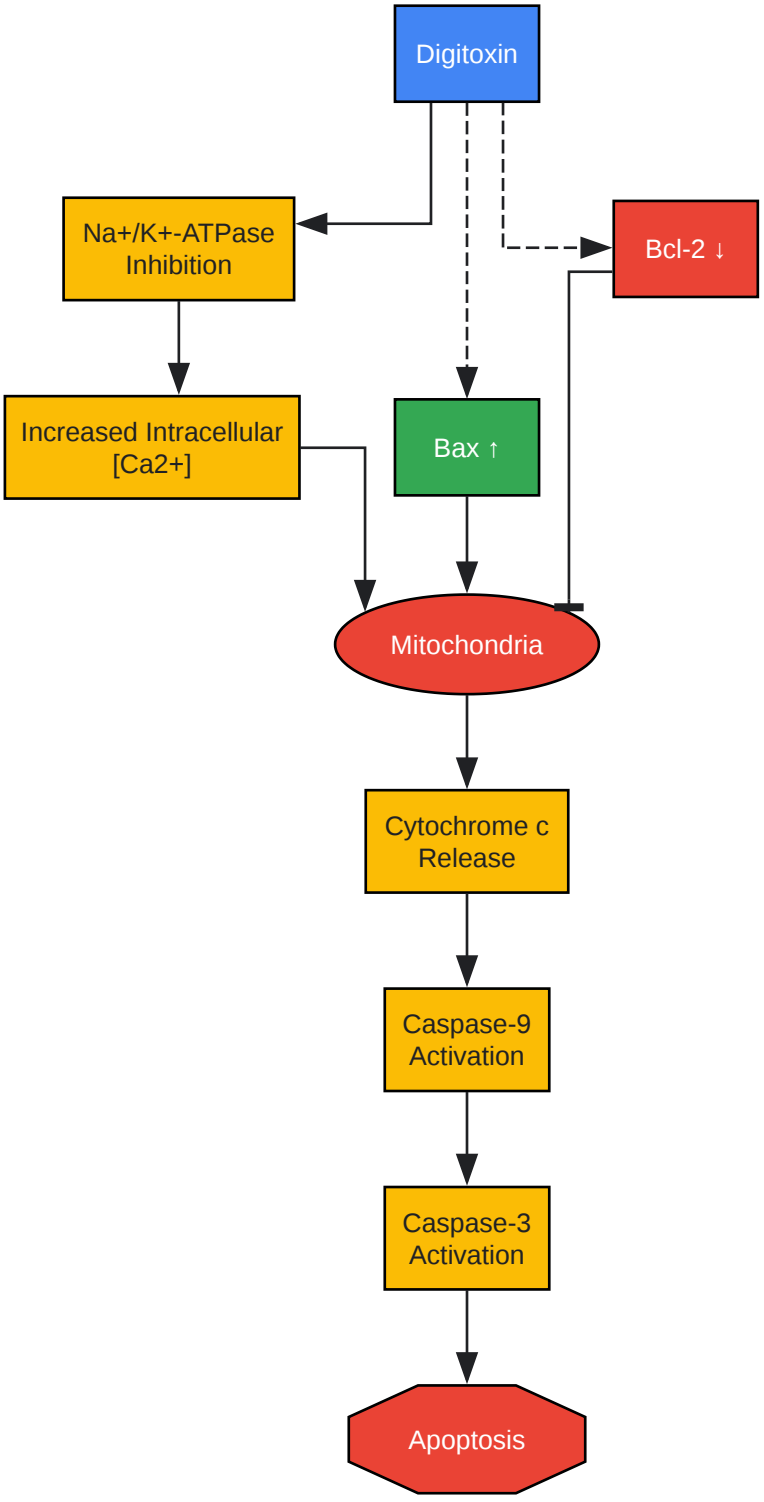

Click to download full resolution via product page

Caption: Digitoxin-induced mitochondrial apoptosis pathway.

© 2026 BenchChem. All rights reserved.

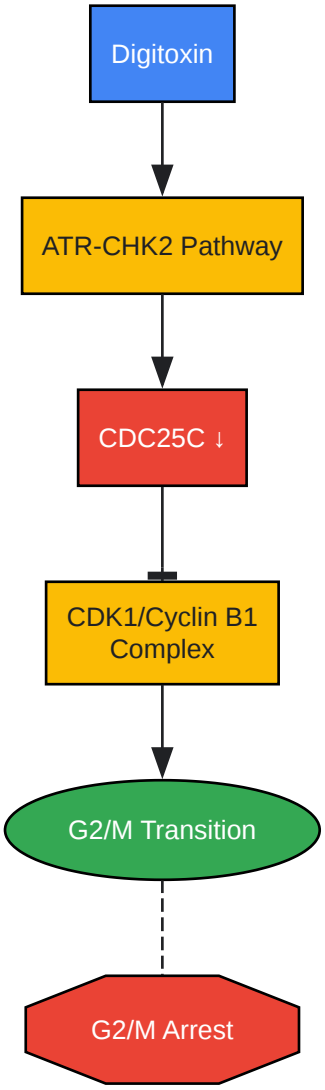

Click to download full resolution via product page

Caption: Digitoxin-induced G2/M cell cycle arrest pathway.

Alternative Compounds

While Digitoxin shows significant promise, other cardiac glycosides and natural compounds have also been investigated for their anticancer properties.

- Digoxin: Similar to Digitoxin, Digoxin has been shown to induce apoptosis and inhibit the proliferation of various cancer cells, including breast and non-small cell lung cancer.[3][7] Its mechanism often involves the inhibition of Na+/K+-ATPase and targeting of HIF-1α.[3][9]
- Ouabain: Another cardiac glycoside that exhibits antiproliferative effects on cancer cells.[1]

© 2026 BenchChem. All rights reserved.

- Apigenin: A dietary flavonoid that can induce G2/M cell cycle arrest in colon carcinoma cell lines by inhibiting p34(cdc2) kinase activity.[10]
- Genistein: An isoflavone that arrests cell cycle progression at the G2-M phase in human gastric cancer cells.[11]
- Diosgenin: A steroid saponin that induces apoptosis in HepG2 cells through the generation of reactive oxygen species and the mitochondrial pathway.[12]

In conclusion, the published literature provides a substantial and consistent body of evidence for the anticancer effects of Digitoxin and other cardiac glycosides. While dedicated "verification" studies are uncommon, the congruence of findings across numerous independent research articles on various cancer models strongly supports the initial observations. The detailed experimental protocols and comparative data presented in this guide offer a solid foundation for researchers to build upon and further explore the therapeutic potential of these compounds.

Need Custom Synthesis?

BenchChem offers custom synthesis for rare earth carbides and specific isotopiclabeling.

Email: info@benchchem.com or Request Quote Online.

References

- 1. researchgate.net [researchgate.net]
- 2. Anti-tumorigenic effects of a novel digitoxin derivative on both estrogen receptor-positive and triple-negative breast cancer cells - PubMed [pubmed.ncbi.nlm.nih.gov]
- 3. Frontiers | Digoxin Enhances the Anticancer Effect on Non-Small Cell Lung Cancer While Reducing the Cardiotoxicity of Adriamycin [frontiersin.org]
- 4. researchgate.net [researchgate.net]
- 5. Inhibitory Effects of Digoxin and Digitoxin on Cell Growth in Human Ovarian Cancer Cell Line SKOV-3 - PMC [pmc.ncbi.nlm.nih.gov]
- 6. Digitoxin induces apoptosis in cancer cells by inhibiting nuclear factor of activated T-cells-driven c-MYC expression - PMC [pmc.ncbi.nlm.nih.gov]

© 2026 BenchChem. All rights reserved.

- 7. europeanreview.org [europeanreview.org]
- 8. europeanreview.org [europeanreview.org]
- 9. Anticancer and Antiviral Properties of Cardiac Glycosides: A Review to Explore the Mechanism of Actions - PMC [pmc.ncbi.nlm.nih.gov]
- 10. Cell-cycle arrest at G2/M and growth inhibition by apigenin in human colon carcinoma cell lines - PubMed [pubmed.ncbi.nlm.nih.gov]
- 11. Genistein arrests cell cycle progression at G2-M - PubMed [pubmed.ncbi.nlm.nih.gov]
- 12. Diosgenin Induces Apoptosis in HepG2 Cells through Generation of Reactive Oxygen Species and Mitochondrial Pathway - PubMed [pubmed.ncbi.nlm.nih.gov]

- To cite this document: BenchChem. [Independent Verification of Cardiac Glycosides' Anticancer Effects: A Comparative Guide]. BenchChem, [2026]. [Online PDF]. Available at: [https://www.benchchem.com/product/b1252536/docs#independent-verification-of-cardiac-glycosides-anticancer-effects-a-comparative-guide]

Disclaimer & Data Validity:

The information provided in this document is for Research Use Only (RUO) and is strictly not intended for diagnostic or therapeutic procedures. While BenchChem strives to provide accurate protocols, we make no warranties, express or implied, regarding the fitness of this product for every specific experimental setup.

Technical Support: The protocols provided are for reference purposes. Unsure if this reagent suits your experiment?

Need Industrial/Bulk Grade? Request Custom Synthesis Quote

BenchChem

Our mission is to be the trusted global source of essential and advanced chemicals, empowering scientists and researchers to drive progress in science and industry.

Contact

Address: 3281 E Guasti Rd

Ontario, CA 91761, United States

Phone: (601) 213-4426

Email: info@benchchem.com

© 2026 BenchChem. All rights reserved.

Contact our Ph.D. Support Team for a compatibility check

© 2026 BenchChem. All rights reserved.