PYR14-TFSI chemical structure and formula

Author: BenchChem Technical Support Team. **Date**: April 2026

Compound of Interest

Compound Name:	*PYR14-TFSI*
CAS No.:	*223437-11-4*
Cat. No.:	*B1250298*

Get Quote

An In-depth Technical Guide to N-Butyl-N-methylpyrrolidinium bis(trifluoromethylsulfonyl)imide (**PYR14-TFSI**)

Introduction

N-Butyl-N-methylpyrrolidinium bis(trifluoromethylsulfonyl)imide, commonly abbreviated as **PYR14-TFSI**, is a room temperature ionic liquid (RTIL).[1] Ionic liquids are salts that are liquid at or near room temperature, and they possess a unique combination of properties including low volatility, high thermal stability, and high ionic conductivity. **PYR14-TFSI** is particularly noted for its wide electrochemical window and high viscosity, making it a significant candidate for electrochemical applications such as in batteries and supercapacitors, rather than in direct drug development roles.[1][2][3] This guide provides a detailed overview of its chemical structure, physicochemical properties, and synthesis for researchers and scientists in materials science and electrochemistry.

Chemical Structure and Formula

PYR14-TFSI is comprised of a pyrrolidinium cation (N-butyl-N-methylpyrrolidinium, [PYR14]+) and a bis(trifluoromethylsulfonyl)imide anion ([TFSI]-).

© 2026 BenchChem. All rights reserved.

Molecular Formula: $C_{11}H_{20}F_6N_2O_4S_2$[4][5][6]

Chemical Identifiers:

- CAS Number: 223437-11-4[4][6]
- SMILES: CCCC[N+]1(C)CCCC1.FC(F)(F)S(=O)(=O)[N-]S(=O)(=O)C(F)(F)F
- InChI: 1S/C9H20N.C2F6NO4S2/c1-3-4-7-10(2)8-5-6-9-10;3-1(4,5)14(10,11)9-15(12,13)2(6,7)8/h3-9H2,1-2H3;/q+1;-1

© 2026 BenchChem. All rights reserved.

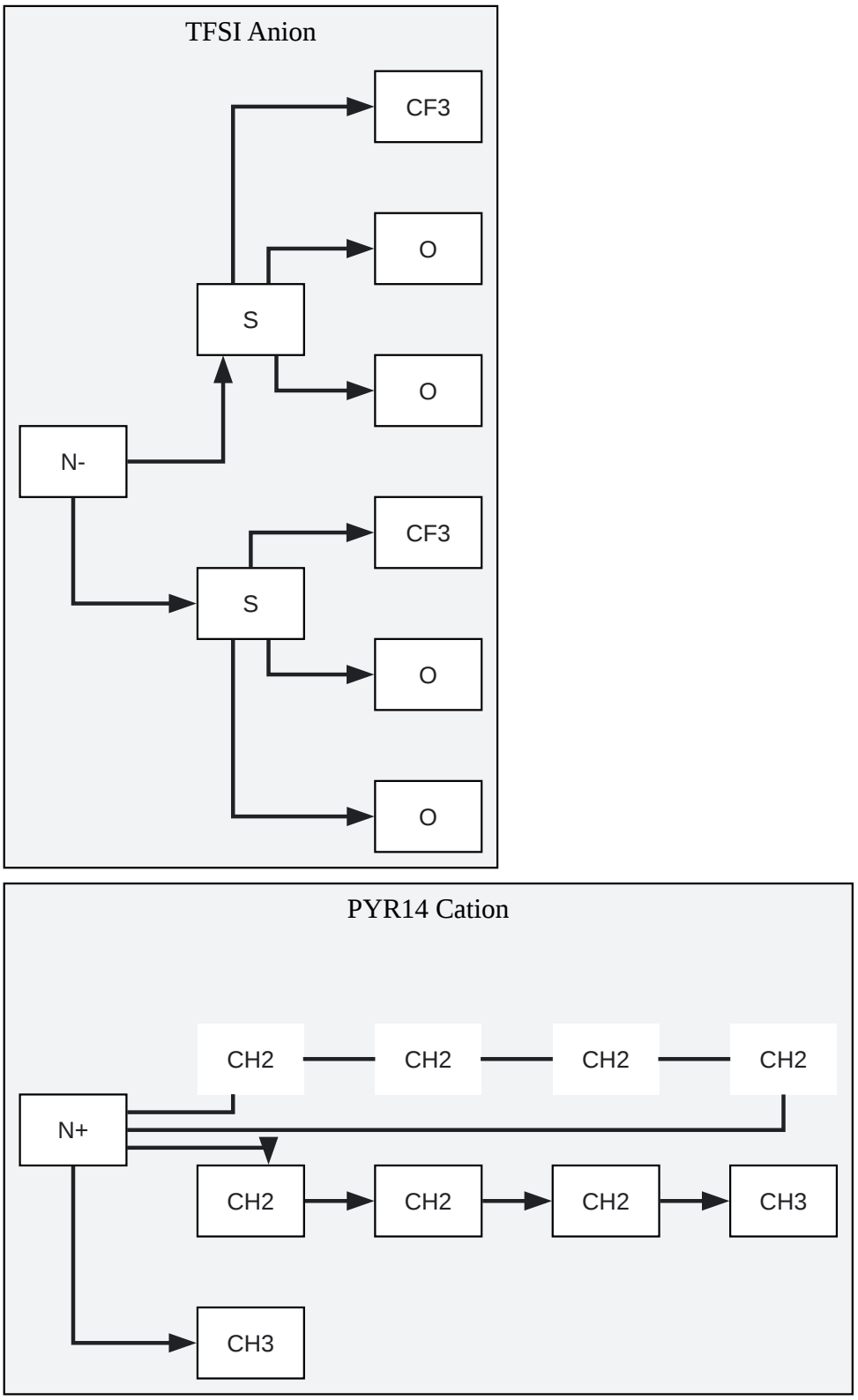

Click to download full resolution via product page

Caption: Chemical structure of **PYR14-TFSI**.

© 2026 BenchChem. All rights reserved.

Physicochemical Properties

The properties of **PYR14-TFSI** make it a suitable electrolyte for various electrochemical devices. Key quantitative data are summarized below.

Property	Value	References
Molecular Weight	422.41 g/mol	[4][5][6]
Appearance	Liquid	
Melting Point	-18 °C	[4][5][6]
Density	1.40 g/cm³ (at 23 °C)	[4][5][6]
Viscosity	94.4 cP (at 20 °C)	[5][6]
Ionic Conductivity	2.12 mS/cm (at 20 °C)	[6]
Electrochemical Window	5.5 V	[1][5]
Flash Point	69 °C	[4]
Water Solubility	Immiscible	[4]
Solubility	Miscible with methanol, acetonitrile, acetone, dichloromethane, and dimethyl sulfoxide.	[4]

Experimental Protocols: Synthesis

PYR14-TFSI is typically synthesized via a two-step process involving a precursor synthesis followed by an anion exchange reaction.[7]

Methodology

Step 1: Precursor Synthesis (Quaternization) The first step is the synthesis of the N-butyl-N-methylpyrrolidinium iodide ([PYR14][I]) precursor.

- Reagents: 1-methylpyrrolidine and 1-iodobutane are used as starting materials.[7][8] Ethyl acetate often serves as the solvent.[7]

© 2026 BenchChem. All rights reserved.

- Procedure: 1-methylpyrrolidine is reacted with a slight excess of 1-iodobutane. The reaction is typically carried out in a round bottom flask with stirring at a controlled temperature (e.g., 45 °C) for several hours to ensure complete reaction.[7]

- Product: The product, 1-butyl-1-methyl-iodo-pyrrolidinium ([PYR14][I]), is formed as a precipitate which can then be isolated. The typical yield for this step is around 83%.[7]

Step 2: Anion Exchange (Metathesis) The second step involves exchanging the iodide anion of the precursor with the desired TFSI anion.

- Reagents: The [PYR14][I] precursor is reacted with Lithium bis(trifluoromethane)sulfonamide (LiTFSI).[7] Water is commonly used as the solvent for this step.[7]

- Procedure: [PYR14][I] is dissolved in water, and a slight excess of LiTFSI is added to the solution. The reaction results in the formation of **PYR14-TFSI** and lithium iodide (LiI) as a byproduct.[7]

- Purification: Since **PYR14-TFSI** is hydrophobic, it phase-separates from the aqueous solution containing the LiI byproduct. The **PYR14-TFSI** layer is then washed multiple times with deionized water to remove impurities. Further purification can be achieved using activated carbon and aluminum oxide to remove colored impurities and trace amounts of reactants.[7] The final product is dried under vacuum to remove any residual water. The expected yield for this step is approximately 85%.[7]

© 2026 BenchChem. All rights reserved.

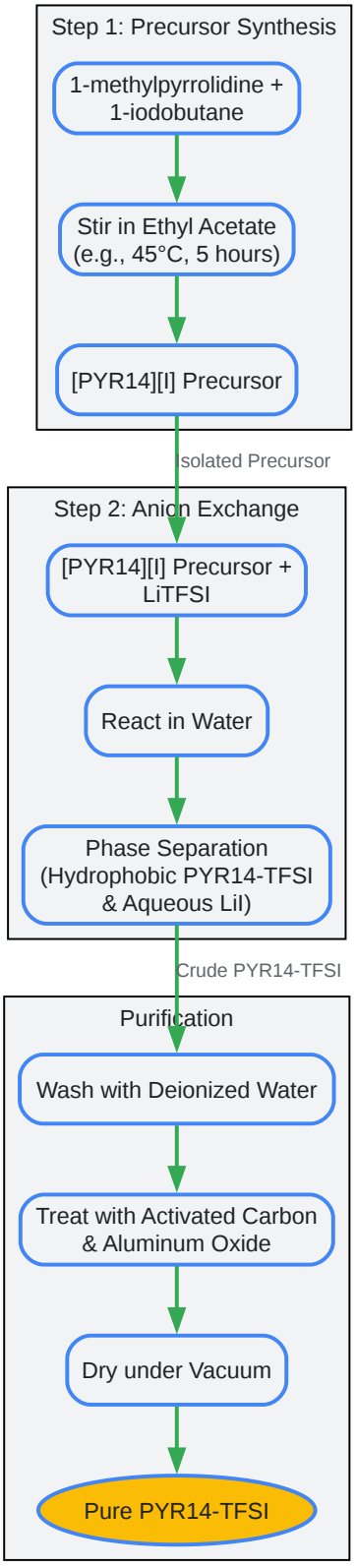

Click to download full resolution via product page

Caption: Workflow for the synthesis of **PYR14-TFSI**.

© 2026 BenchChem. All rights reserved.

Applications in Research and Development

The primary area of application for **PYR14-TFSI** is in electrochemistry, owing to its favorable properties as an electrolyte.[9]

- Lithium-ion Batteries: It is extensively studied as a non-flammable and stable electrolyte component for lithium-ion batteries, enhancing their safety and performance, especially at high temperatures.[2][10][11]
- Supercapacitors: Its wide electrochemical window and good ionic conductivity make it suitable for high-voltage electric double-layer capacitors (EDLCs).[2][9]
- Electrodeposition: **PYR14-TFSI** serves as a medium for the electrodeposition of metals and conductive polymers, offering a safer alternative to volatile organic solvents.[3]

While the prompt's audience includes drug development professionals, current research overwhelmingly points to **PYR14-TFSI**'s utility in materials science and energy storage, not pharmacology or as a direct component in drug delivery systems. The term "prodrug" and related concepts are not found in the context of **PYR14-TFSI** in the provided search results.[12]

Safety Information

According to safety data, **PYR14-TFSI** may cause skin and serious eye irritation.[13] Mixtures containing **PYR14-TFSI** and lithium salts like LiTFSI can be harmful if swallowed and may cause severe skin burns and eye damage.[14] Appropriate personal protective equipment, including gloves and eye protection, should be used when handling this chemical.[15] It should be stored in a tightly sealed container at room temperature.[14][15]

Need Custom Synthesis?

BenchChem offers custom synthesis for rare earth carbides and specific isotopiclabeling.

Email: info@benchchem.com or Request Quote Online.

References

- 1. medchemexpress.com [medchemexpress.com]

- 2. Ionic Liquid Electrolytes for Electrochemical Energy Storage Devices - PMC [pmc.ncbi.nlm.nih.gov]
- 3. March Newsletter - PYR14 TFSI - Solvionic [solvionic.com]
- 4. Ionic liquid,CAS#:223437-11-4,N-丁基-N-甲基吡咯烷双（三氟甲烷磺酰）亚胺盐,N-butyl-N-methylpyrrolidinium bis((trifluoromethyl)sulfonyl)imide（PYR14TFSI） [en.chemfish.com]
- 5. roco.global [roco.global]
- 6. 1-Butyl-1-methylpyrrolidinium bis(trifluoromethylsulfonyl)imide, >99.5% | IoLiTec [iolitec.de]
- 7. Ionic Liquid Synthesis - CleanEnergyWIKI [cleanenergywiki.org]
- 8. researchgate.net [researchgate.net]
- 9. researchgate.net [researchgate.net]
- 10. mdpi.com [mdpi.com]
- 11. mdpi.com [mdpi.com]
- 12. Prodrugs as empowering tools in drug discovery and development: recent strategic applications of drug delivery solutions to mitigate challenges associated with lead compounds and drug candidates - Chemical Society Reviews (RSC Publishing) [pubs.rsc.org]
- 13. 1-Butyl-1-methylpyrrolidinium bis(trifluoromethylsulfonyl)imide | C11H20F6N2O4S2 | CID 11048104 - PubChem [pubchem.ncbi.nlm.nih.gov]
- 14. solvionic.com [solvionic.com]
- 15. solvionic.com [solvionic.com]

- To cite this document: BenchChem. [PYR14-TFSI chemical structure and formula]. BenchChem, [2026]. [Online PDF]. Available at: [https://www.benchchem.com/product/b1250298/docs#pyr14-tfsi-chemical-structure-and-formula]

Disclaimer & Data Validity:

The information provided in this document is for Research Use Only (RUO) and is strictly not intended for diagnostic or therapeutic procedures. While BenchChem strives to provide accurate protocols, we make no warranties, express or implied, regarding the fitness of this product for every specific experimental setup.

© 2026 BenchChem. All rights reserved.

Technical Support: The protocols provided are for reference purposes. Unsure if this reagent suits your experiment?

Need Industrial/Bulk Grade? Request Custom Synthesis Quote

BenchChem

Our mission is to be the trusted global source of essential and advanced chemicals, empowering scientists and researchers to drive progress in science and industry.

Contact

Address: 3281 E Guasti Rd

Ontario, CA 91761, United States

Phone: (601) 213-4426

Email: info@benchchem.com

Contact our Ph.D. Support Team for a compatibility check

© 2026 BenchChem. All rights reserved.