Application Note: Detection of Apoptosis in SF1126-Treated Cells using the TUNEL Assay

Author: BenchChem Technical Support Team. **Date**: April 2026

Compound of Interest

Compound Name: *ASP1126*

Cat. No.: *B12427371*

Get Quote

Audience: Researchers, scientists, and drug development professionals.

Introduction

Apoptosis, or programmed cell death, is a critical process for normal tissue development and homeostasis. Its dysregulation is a hallmark of many diseases, including cancer. The phosphatidylinositol 3-kinase (PI3K)/AKT signaling pathway is a key regulator of cell survival, and its aberrant activation is common in various cancers, leading to resistance to apoptosis.[1][2]

SF1126 is a novel dual inhibitor that targets both PI3K and bromodomain-containing protein 4 (BRD4).[3][4] It is a water-soluble prodrug that converts to the active pan-PI3K inhibitor, LY294002, upon administration.[5][6] By inhibiting the PI3K/Akt pathway, SF1126 effectively blocks pro-survival signaling, leading to cell cycle arrest and induction of apoptosis in cancer cells.[3][7]

The Terminal deoxynucleotidyl transferase dUTP Nick-End Labeling (TUNEL) assay is a widely used method for detecting DNA fragmentation, a characteristic feature of the late stages of apoptosis.[8] This assay enzymatically labels the 3'-OH ends of fragmented DNA, allowing for the identification and quantification of apoptotic cells within a population.[9][10] This application

© 2026 BenchChem. All rights reserved.

note provides a detailed protocol for using the TUNEL assay to measure apoptosis in cells treated with the PI3K inhibitor SF1126.

Mechanism of Action: SF1126-Induced Apoptosis

SF1126 exerts its pro-apoptotic effects primarily by inhibiting the PI3K/AKT signaling cascade. In a typical signaling scenario, growth factors bind to receptor tyrosine kinases, activating PI3K. Activated PI3K phosphorylates phosphatidylinositol (4,5)-bisphosphate (PIP2) to form phosphatidylinositol (3,4,5)-trisphosphate (PIP3). PIP3 recruits and activates AKT, a serine/threonine kinase that promotes cell survival by phosphorylating and inactivating several pro-apoptotic targets, including Bad and caspase-9.[11][12] SF1126 blocks the activity of PI3K, preventing the activation of AKT. This disinhibition of pro-apoptotic proteins ultimately leads to the activation of the caspase cascade and execution of apoptosis.[1][7]

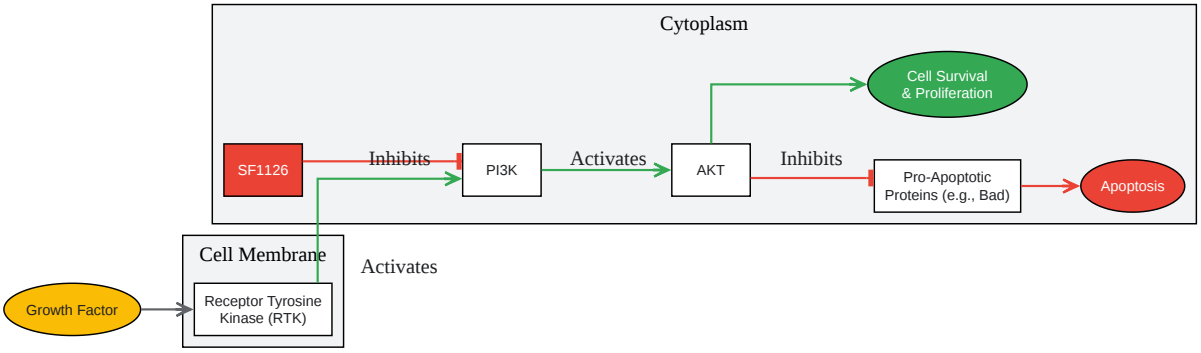

Click to download full resolution via product page

Caption: SF1126 inhibits the PI3K/AKT survival pathway, inducing apoptosis.

Expected Results and Data Presentation

Treatment of various cancer cell lines with SF1126 has been shown to inhibit proliferation and significantly induce apoptosis.[3] The efficacy of SF1126 can be quantified by determining its

© 2026 BenchChem. All rights reserved.

half-maximal inhibitory concentration (IC50) for cell proliferation and by measuring the increase in apoptotic markers.

Table 1: Effect of SF1126 on Cell Proliferation and Apoptosis

Cell Line	Cancer Type	Parameter	Value	Reference
HT-29	**Colorectal Cancer**	**Apoptosis Detection**	**Significant increase in TUNEL-positive cells**	**[3]**
MM.1S	Multiple Myeloma	Cleaved Caspase-3 (5 µM SF1126)	1.4-fold increase vs. control	[7]
MM.1R	Multiple Myeloma	Cleaved Caspase-3 (5 µM SF1126)	3.0-fold increase vs. control	[7]
SK-Hep1	Hepatocellular Carcinoma	Proliferation IC50 (48h)	3.14 µM	[4]

| Huh7 | Hepatocellular Carcinoma | Proliferation IC50 (48h) | 2.14 µM |[4] |

Experimental Workflow

The general workflow for assessing apoptosis via the TUNEL assay involves cell culture and treatment, followed by fixation and permeabilization to allow entry of the labeling reagents. The key step is the enzymatic reaction where Terminal deoxynucleotidyl Transferase (TdT) adds labeled dUTPs to the DNA strand breaks. Finally, the labeled cells are visualized and quantified.

© 2026 BenchChem. All rights reserved.

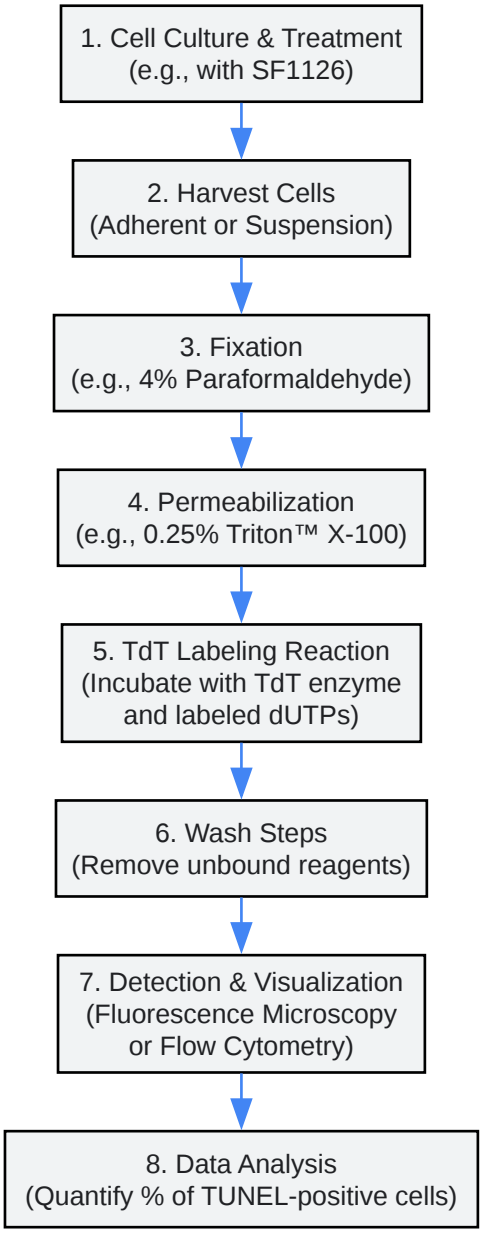

Click to download full resolution via product page

Caption: General experimental workflow for the TUNEL assay.

Detailed Experimental Protocols

The following protocols provide a general guideline for performing a fluorescent TUNEL assay on cells treated with SF1126. Optimization may be required depending on the cell type and experimental conditions.

© 2026 BenchChem. All rights reserved.

Materials Required

- Cell culture medium, flasks, and plates
- SF1126 (or other apoptosis-inducing agent)
- Negative control (vehicle, e.g., DMSO)
- Positive control (e.g., DNase I)
- Phosphate-Buffered Saline (PBS)
- Fixation Solution (e.g., 4% paraformaldehyde in PBS)
- Permeabilization Solution (e.g., 0.25% Triton™ X-100 in PBS)
- TUNEL Assay Kit (containing TdT Reaction Buffer, TdT Enzyme, and fluorescently labeled dUTP)
- Nuclear counterstain (e.g., DAPI or Hoechst 33342)
- Fluorescence microscope or flow cytometer

Protocol 1: Adherent Cells (Microscopy)

- Cell Seeding: Seed adherent cells onto sterile glass coverslips in a 24-well plate or in a 96-well imaging plate. Culture until they reach 60-70% confluency.
- Treatment: Treat cells with the desired concentrations of SF1126 for the specified duration (e.g., 24-48 hours). Include untreated and vehicle-treated controls.
- Fixation:
  - Carefully remove the culture medium.
  - Gently wash the cells once with PBS.
  - Add 100 µL (for 96-well) or 500 µL (for 24-well) of Fixation Solution to each well.[13]

© 2026 BenchChem. All rights reserved.

- Incubate for 15-20 minutes at room temperature.[14]
- Remove the fixative and wash twice with PBS.

- Permeabilization:
  - Add 100 µL (for 96-well) or 500 µL (for 24-well) of Permeabilization Solution.
  - Incubate for 20 minutes at room temperature.[14]
  - Wash twice with PBS.
- Positive Control (Optional): For one set of control cells, treat with DNase I according to the kit manufacturer's instructions to induce DNA strand breaks.
- TUNEL Reaction:
  - Prepare the TdT reaction cocktail according to the manufacturer's protocol (typically by mixing the TdT enzyme with the reaction buffer and labeled dUTP).
  - Remove PBS and add 50-100 µL of the TdT reaction cocktail to each well/coverslip.[14][15]
  - Incubate for 60 minutes at 37°C in a humidified chamber, protected from light.[14][15]
- Stopping the Reaction:
  - Remove the reaction cocktail.
  - Wash the cells 2-3 times with a wash buffer (e.g., 3% BSA in PBS) or PBS.[14]
- Counterstaining:
  - Incubate cells with a nuclear counterstain like DAPI or Hoechst 33342 for 10-15 minutes at room temperature.[14]
  - Wash twice with PBS.

© 2026 BenchChem. All rights reserved.

- Imaging: Mount the coverslips onto microscope slides with an anti-fade mounting medium. Image using a fluorescence microscope. Apoptotic cells will exhibit bright nuclear fluorescence (e.g., green for FITC-dUTP), while all nuclei will be visible with the counterstain (e.g., blue for DAPI).

Protocol 2: Suspension Cells (Flow Cytometry)

- Cell Culture and Treatment: Culture suspension cells in flasks to the desired density. Treat with SF1126 as described for adherent cells.
- Harvesting:
  - Transfer 1-5 x 10^6 cells to centrifuge tubes.[16]
  - Centrifuge at 300 x g for 5 minutes and discard the supernatant.[16]
  - Resuspend the cell pellet in 0.5 mL of PBS.
- Fixation:
  - Add the cell suspension to 5 mL of ice-cold 1% paraformaldehyde in PBS.[16]
  - Incubate for 15-30 minutes on ice.
  - Centrifuge at 300 x g for 5 minutes and discard the supernatant.
  - Wash the cells twice by resuspending in 5 mL of PBS and centrifuging.
- Permeabilization/Storage:
  - Resuspend the cell pellet in 0.5 mL of PBS.
  - Add the cells dropwise to 5 mL of ice-cold 70% ethanol while gently vortexing.[16]
  - Incubate for at least 30 minutes on ice. Cells can be stored at -20°C for several days at this stage.[16]
- Rehydration and Washing:

© 2026 BenchChem. All rights reserved.

- Centrifuge the cells at 300 x g for 5 minutes and discard the ethanol.
- Resuspend the cells in 1 mL of a wash buffer (provided in most kits or PBS) and centrifuge again. Repeat this wash step once more.[16]

- TUNEL Reaction:
  - Prepare the TdT reaction cocktail as per the manufacturer's instructions.
  - Resuspend the cell pellet in 50-100 µL of the reaction cocktail.
  - Incubate for 60 minutes at 37°C, protected from light. Agitate the cells every 15 minutes to ensure uniform labeling.[16]
- Washing:
  - Add 1 mL of a rinse buffer (or PBS) to each tube and centrifuge.
  - Remove the supernatant and repeat the wash step.[16]
- Analysis:
  - Resuspend the final cell pellet in 0.5 mL of PBS or a suitable buffer for flow cytometry.
  - Analyze the samples on a flow cytometer, detecting the fluorescence of the incorporated dUTP (e.g., in the FITC channel). The percentage of TUNEL-positive cells can be determined by gating on the fluorescently labeled population compared to the negative control.

Need Custom Synthesis?

BenchChem offers custom synthesis for rare earth carbides and specific isotopiclabeling.

Email: info@benchchem.com or Request Quote Online.

References

- 1. Aberrant expression of PI3K/AKT signaling is involved in apoptosis resistance of hepatocellular carcinoma - PMC [pmc.ncbi.nlm.nih.gov]
- 2. Role of the PI3K/AKT signalling pathway in apoptotic cell death in the cerebral cortex of streptozotocin-induced diabetic rats - PMC [pmc.ncbi.nlm.nih.gov]
- 3. Dual PI3K-BRD4 Inhibitor SF1126 Inhibits Colorectal Cancer Cell Growth in Vitro and in Vivo - PubMed [pubmed.ncbi.nlm.nih.gov]
- 4. medchemexpress.com [medchemexpress.com]
- 5. Facebook [cancer.gov]
- 6. aacrjournals.org [aacrjournals.org]
- 7. An integrin-targeted, pan-isoform, phosphoinositide-3 kinase inhibitor, SF1126, has activity against multiple myeloma in vivo - PMC [pmc.ncbi.nlm.nih.gov]
- 8. Detection of apoptosis by TUNEL assay - PubMed [pubmed.ncbi.nlm.nih.gov]
- 9. Analysis of apoptosis by cytometry using TUNEL assay - PubMed [pubmed.ncbi.nlm.nih.gov]
- 10. TUNEL Assay Kit (Fluorescence, 488 nm) | Cell Signaling Technology [cellsignal.com]
- 11. Inhibition of Apoptosis | Cell Signaling Technology [cellsignal.com]
- 12. PI3K/AKT/mTOR pathway - Wikipedia [en.wikipedia.org]
- 13. Use TUNEL Assays to Assess DNA Fragmentation | AAT Bioquest [aatbio.com]
- 14. creative-bioarray.com [creative-bioarray.com]
- 15. Click-iT TUNEL Alexa Fluor Imaging Assay Protocol | Thermo Fisher Scientific - JP [thermofisher.com]
- 16. content.abcam.com [content.abcam.com]

- To cite this document: BenchChem. [Application Note: Detection of Apoptosis in SF1126-Treated Cells using the TUNEL Assay]. BenchChem, [2026]. [Online PDF]. Available at: [https://www.benchchem.com/product/b12427371/docs#application-note-detection-of-apoptosis-in-sf1126-treated-cells-using-the-tunel-assay]

Disclaimer & Data Validity:

The information provided in this document is for Research Use Only (RUO) and is strictly not intended for diagnostic or therapeutic procedures. While BenchChem strives to provide

© 2026 BenchChem. All rights reserved.

accurate protocols, we make no warranties, express or implied, regarding the fitness of this product for every specific experimental setup.

Technical Support: The protocols provided are for reference purposes. Unsure if this reagent suits your experiment?

Need Industrial/Bulk Grade? Request Custom Synthesis Quote

BenchChem

Our mission is to be the trusted global source of essential and advanced chemicals, empowering scientists and researchers to drive progress in science and industry.

Contact

Address: 3281 E Guasti Rd

Ontario, CA 91761, United States

Phone: (601) 213-4426

Email: info@benchchem.com

Contact our Ph.D. Support Team for a compatibility check

© 2026 BenchChem. All rights reserved.