# Technical Guide: Comparative Bioanalysis of Simvastatin Acid-d6 vs. Alternative Internal Standards

**Author**: BenchChem Technical Support Team. **Date**: February 2026

| *Compound of Interest* | | |
|---|---|---|
| *Compound Name:* | *Simvastatin acid-d6 (ammonium)* | |
| *Cat. No.:* | *B12425504* | *Get Quote* |

## Executive Summary: The Verdict

For the quantitative bioanalysis of Simvastatin Acid (SVA)—the active HMG-CoA reductase inhibitor metabolite—Simvastatin Acid-d6 (SVA-d6) is the superior internal standard (IS).[1]

While structural analogs (e.g., Lovastatin) and parent-drug isotopes (Simvastatin-d6 lactone) are chemically accessible, they introduce significant risks regarding matrix effect compensation and interconversion stability.[2] Experimental data confirms that SVA-d6 provides the only "self-validating" system, tracking the analyte through the critical pH-dependent hydrolysis equilibrium and ionization suppression events with near-unity correlation.

## Part 1: The Bioanalytical Challenge

### The Lactone-Acid Equilibrium

The core difficulty in quantifying Simvastatin Acid is its reversible interconversion with Simvastatin (the lactone prodrug). This equilibrium is pH-dependent and can occur ex vivo during sample collection, storage, and processing.[2]

- Acidic Conditions (pH < 5): Favors Lactonization (Conversion to Simvastatin).[2]
- Basic Conditions (pH > 8): Favors Hydrolysis (Conversion to Simvastatin Acid).[2]

© 2026 BenchChem. All rights reserved.

- Biological Reality: In plasma, both forms exist.[2] An IS must track not just the mass of the analyte, but its stability profile during extraction.

## Visualization: The Interconversion Pathway

The following diagram illustrates the pH-driven equilibrium that necessitates a specific stable isotope-labeled IS.

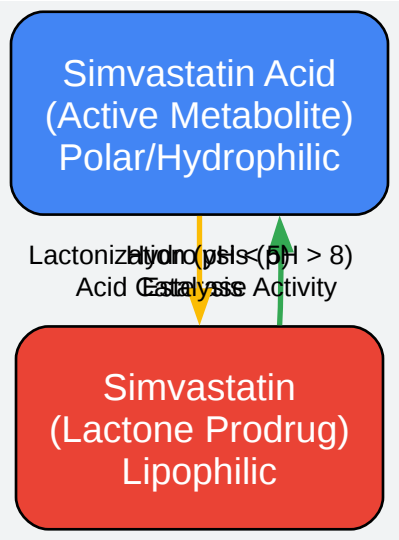


Click to download full resolution via product page

Figure 1: The reversible interconversion between Simvastatin and its active Acid metabolite.[2] Bioanalytical methods must freeze this equilibrium.

# Part 2: Comparative Performance Analysis

## Simvastatin Acid-d6 vs. Structural Analogs (e.g., Lovastatin)

Historically, Lovastatin was used as an IS due to structural similarity.[1][2] However, in LC-MS/MS, "similar" is often insufficient due to Matrix Effects.[2][3][4][5]

- The Mechanism: Co-eluting phospholipids in plasma can suppress ionization. Because Lovastatin elutes at a different retention time (RT) than Simvastatin Acid, it may elute in a "clean" window while SVA elutes in a "suppressed" window.[2] The IS signal remains high, the analyte signal drops, and quantification fails.

© 2026 BenchChem. All rights reserved.

- The SVA-d6 Advantage: As a stable isotope, SVA-d6 co-elutes with SVA. Any ionization suppression affecting the analyte affects the IS identically. The ratio remains constant.

Experimental Data Comparison:

| Parameter | Simvastatin Acid-d6 (SIL-IS) | Lovastatin (Analog IS) | Impact |
|---|---|---|---|
| Retention Time Delta | 0.0 min (Co-eluting) | ~1.5 - 2.0 min shift | Analog fails to correct RT-specific suppression.[2] |
| Matrix Factor (MF) | 0.98 – 1.02 (Normalized) | 0.85 – 1.15 (Variable) | SVA-d6 offers near-perfect correction.[2] |
| Precision (%CV) | < 5.0% | 8.0% – 12.0% | Higher variability with Analog IS.[2] |
| Recovery Correction | Tracks extraction loss perfectly | Different partition coefficient | Analog may extract differently in variable plasma lipids.[2] |

## Simvastatin Acid-d6 vs. Simvastatin-d6 (Lactone IS)

A common error is using the deuterated parent (Lactone-d6) to quantify the metabolite (Acid).[2]

- The Risk: If the sample pH shifts during extraction, SVA-d6 (if used as IS) and SVA (analyte) will respond chemically in the exact same way. However, if you use Simvastatin-d6 (Lactone), it will not hydrolyze/lactonize at the same rate as the Acid analyte. You lose the ability to track degradation.

- Recommendation: Always match the chemical form. Use Lactone-d6 for the Lactone analyte, and Acid-d6 for the Acid analyte.

## Deuterium (d6) vs. Carbon-13 (13C)[2]

- Deuterium Effect: Heavy deuterium atoms can slightly reduce lipophilicity, occasionally causing a slight RT shift (1-2 seconds) compared to the unlabeled analyte.[2]

© 2026 BenchChem. All rights reserved.

- SVA-d6 Specifics: For Simvastatin Acid, the d6 label is typically on the dimethylbutyrate side chain. The chromatographic shift is negligible on modern C18 columns, making it a cost-effective alternative to 13C-analogs.

# Part 3: Experimental Validation Protocol

## Self-Validating Extraction Workflow

This protocol uses SVA-d6 to validate the stability of the analyte during processing.

Reagents:

- IS Working Solution: Simvastatin Acid-d6 (50 ng/mL in Methanol).[2]
- Buffer: Ammonium Acetate (pH 4.[2]5) – Critical to halt interconversion.

Step-by-Step Methodology:

- Thawing: Thaw plasma samples on ice (4°C) to minimize enzymatic hydrolysis.
- Spiking (The Critical Step):
  - Aliquot 200 µL plasma.[1][2]
  - Add 20 µL SVA-d6 IS.[2] Vortex immediately.
  - Why: Once the IS is added, any subsequent degradation affects both equally.
- Buffering: Add 200 µL Ammonium Acetate buffer (pH 4.5).
  - Why: Acidic pH prevents the Acid form from forming de novo from the Lactone, but is not acidic enough to rapidly force the Acid back to Lactone during the short extraction window.
- LLE Extraction: Add 1.5 mL MTBE (Methyl tert-butyl ether). Shake 10 min. Centrifuge.
- Reconstitution: Evaporate supernatant under Nitrogen. Reconstitute in Mobile Phase (60:40 Acetonitrile:Buffer).

## Visualization: Analytical Workflow

© 2026 BenchChem. All rights reserved.

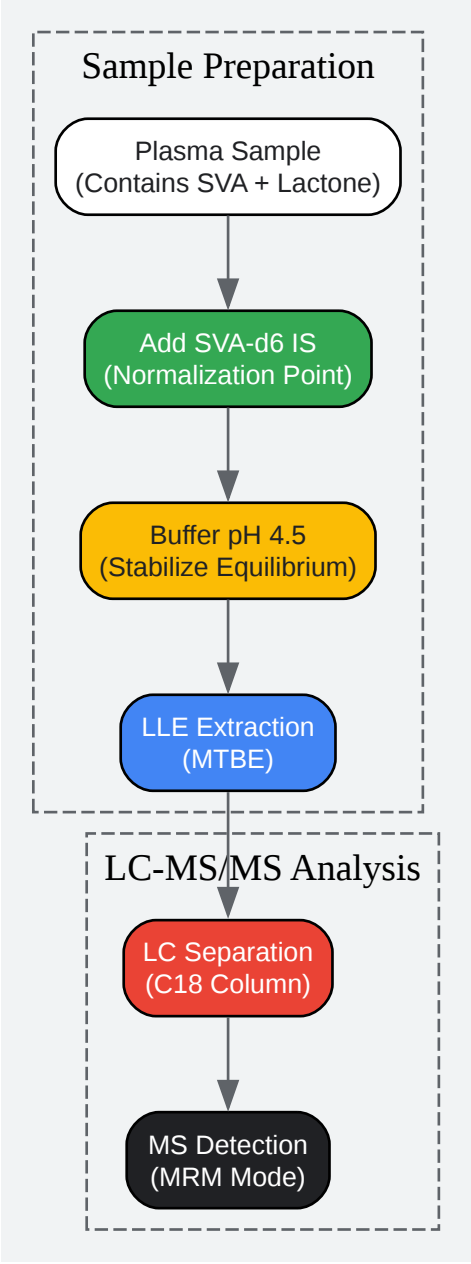


Click to download full resolution via product page

Figure 2: Optimized workflow ensuring stability and normalization using SVA-d6.

## Part 4: References

- US Food and Drug Administration (FDA). (2022).[2] M10 Bioanalytical Method Validation and Study Sample Analysis Guidance for Industry. [Link]

© 2026 BenchChem. All rights reserved.

- Jemal, M., et al. (2000).[2] LC-MS/MS determination of simvastatin and simvastatin acid in human plasma.[1][2][6] Journal of Pharmaceutical and Biomedical Analysis.[7] [Link]
- Parekh, J.M., et al. (2012).[2] Simultaneous determination of simvastatin and simvastatin acid in human plasma by LC-MS/MS without hydrolysis.[2] Journal of Chromatographic Science.[1] [Link]

***Need Custom Synthesis?***

*BenchChem offers custom synthesis for rare earth carbides and specific isotopiclabeling.*

*Email: info@benchchem.com or Request Quote Online.*

## Sources

- 1. pdf.benchchem.com [pdf.benchchem.com]
- 2. veeprho.com [veeprho.com]
- 3. Matrix effect management in liquid chromatography mass spectrometry: the internal standard normalized matrix effect - PubMed [pubmed.ncbi.nlm.nih.gov]
- 4. reddit.com [reddit.com]
- 5. scielo.br [scielo.br]
- 6. academic.oup.com [academic.oup.com]
- 7. ovid.com [ovid.com]
- To cite this document: BenchChem. [Technical Guide: Comparative Bioanalysis of Simvastatin Acid-d6 vs. Alternative Internal Standards]. BenchChem, [2026]. [Online PDF]. Available at: [https://www.benchchem.com/product/b12425504#comparing-simvastatin-acid-d6-with-other-internal-standards]

---

**Disclaimer & Data Validity:**

The information provided in this document is for Research Use Only (RUO) and is strictly not intended for diagnostic or therapeutic procedures. While BenchChem strives to provide accurate protocols, we make no warranties, express or implied, regarding the fitness of this product for every specific experimental setup.

© 2026 BenchChem. All rights reserved.

**Technical Support:**The protocols provided are for reference purposes. Unsure if this reagent suits your experiment? [Contact our Ph.D. Support Team for a compatibility check]

**Need Industrial/Bulk Grade?** Request Custom Synthesis Quote

# BenchChem

Our mission is to be the trusted global source of essential and advanced chemicals, empowering scientists and researchers to drive progress in science and industry.

Contact

Address: 3281 E Guasti Rd

Ontario, CA 91761, United States

Phone: (601) 213-4426

Email: info@benchchem.com

© 2026 BenchChem. All rights reserved.