selecting the appropriate buffer for p5 DnaK interaction studies

Author: BenchChem Technical Support Team. **Date**: April 2026

Compound of Interest

Compound Name:	*p5 Ligand for Dnak and DnaJ*
Cat. No.:	*B12423487*

Get Quote

Technical Support Center: p5 and DnaK Interaction Studies

This technical support center provides researchers, scientists, and drug development professionals with detailed guidance on selecting the appropriate buffer and troubleshooting experimental setups for studying the interaction between the p5 peptide and the DnaK chaperone.

Frequently Asked Questions (FAQs)

Q1: What is the optimal buffer pH and ionic strength for studying the p5-DnaK interaction?

A1: The optimal pH for studying p5-DnaK interactions is generally within the physiological range of 7.4-7.6. Buffers such as HEPES-KOH and Tris-HCl are commonly used. The ionic strength should also mimic physiological conditions, typically around 150 mM total salt concentration. This is often achieved with a combination of KCl and NaCl. It is crucial to maintain a stable pH and ionic strength throughout your experiment as variations can significantly impact protein conformation and binding affinities.[1][2]

© 2026 BenchChem. All rights reserved.

Q2: What are the essential components of a buffer for p5-DnaK binding assays?

A2: A typical buffer for p5-DnaK interaction studies should contain:

- Buffering agent: 25-100 mM HEPES or Tris-HCl at pH 7.4-7.6 to maintain a stable pH.[3][4][5]
- Potassium Chloride (KCl): 20-150 mM. Potassium ions are important for DnaK's chaperone activity.[3]
- Magnesium Chloride ($MgCl_2$): 1-10 mM. Magnesium is a crucial cofactor for ATP binding and hydrolysis by DnaK.[3][6]
- ATP or ADP: The presence and type of nucleotide are critical as they modulate DnaK's affinity for its substrates. For studying the high-affinity binding state, ADP is typically included. For observing the ATP-dependent release of p5, ATP will be the key component.
- Reducing agent (optional but recommended): 1-2 mM Dithiothreitol (DTT) or β-mercaptoethanol to prevent oxidation of cysteine residues.[4]
- Detergent (optional): A low concentration (e.g., 0.01-0.1%) of a non-ionic detergent like Tween-20 or Triton X-100 can be included to prevent non-specific binding, especially in techniques like SPR and Co-IP.[3][6]

Q3: How does ATP affect the interaction between p5 and DnaK?

A3: ATP binding and hydrolysis are central to the DnaK chaperone cycle and its interaction with substrates like p5. In the ADP-bound state, DnaK has a high affinity for its substrates. Upon binding ATP, DnaK undergoes a conformational change that leads to a low-affinity state, resulting in the release of the bound substrate.[7][8] Therefore, including ATP in your buffer is essential if you are studying the dynamics of p5 release from DnaK. Conversely, to study the stable p5-DnaK complex, ADP should be used.

Troubleshooting Guides

Low or No Signal in Your Binding Assay

© 2026 BenchChem. All rights reserved.

Problem: You are not observing any interaction between p5 and DnaK in your experiment (e.g., no binding in SPR, no heat change in ITC, or no pulldown in Co-IP).

Possible Causes and Solutions:

Possible Cause	Recommended Solution
Incorrect Buffer Composition	Ensure your buffer contains essential components like $MgCl_2$ and KCl at appropriate concentrations. Verify the pH is within the optimal range (7.4-7.6).
Inactive DnaK	Confirm the activity of your DnaK protein. Perform an ATPase activity assay to ensure it is functional.
Degraded p5 Peptide	Check the integrity of your p5 peptide. Use freshly prepared peptide solutions.
Inappropriate Nucleotide State	For observing binding, ensure you are using ADP to stabilize the high-affinity state of DnaK. If studying release, ATP is required.
Weak Interaction	The interaction might be too weak to detect under your current experimental conditions. Try increasing the concentration of one or both binding partners.

High Background or Non-Specific Binding

Problem: You are observing high background signal or non-specific binding in your assay, particularly in Co-Immunoprecipitation (Co-IP) or Surface Plasmon Resonance (SPR).[6][8]

Possible Causes and Solutions:

© 2026 BenchChem. All rights reserved.

Possible Cause	Recommended Solution
Insufficient Blocking	In Co-IP, pre-clear your lysate with beads before adding the specific antibody. For SPR, ensure the sensor chip surface is properly blocked.
Inadequate Washing	Increase the number and/or stringency of your wash steps. You can increase the salt concentration (up to 1 M NaCl) or add a non-ionic detergent (up to 1% Tween-20) to the wash buffer.[8]
Hydrophobic Interactions	Include a non-ionic detergent (e.g., 0.05% Tween-20) in your binding and wash buffers to minimize non-specific hydrophobic interactions.[7]
Protein Aggregation	Centrifuge your protein and peptide solutions at high speed before use to remove any aggregates.

Quantitative Data Summary

The binding affinity of p5 for DnaK can vary depending on the experimental conditions, particularly the nucleotide state of DnaK.

Experimental Condition	Binding Affinity (Kd)	Reference
DnaK in the presence of ADP	~0.1 - 2.2 µM	[9][10]
DnaK in the presence of ATP	Weaker affinity, release is favored	[11]

Experimental Protocols

Surface Plasmon Resonance (SPR)

This protocol outlines the general steps for analyzing the p5-DnaK interaction using SPR.

© 2026 BenchChem. All rights reserved.

- Immobilization of DnaK:
  - Equilibrate a CM5 sensor chip with SPR running buffer (e.g., 10 mM HEPES pH 7.4, 150 mM NaCl, 5 mM $MgCl_2$, 1 mM ADP, 0.05% Tween-20).[7]
  - Activate the carboxyl groups on the sensor surface using a mixture of EDC and NHS.
  - Inject DnaK (at a concentration of 10-50 µg/mL in 10 mM sodium acetate, pH 4.5) over the activated surface to achieve the desired immobilization level.
  - Deactivate any remaining active groups with ethanolamine.
- Binding Analysis:
  - Prepare a series of dilutions of the p5 peptide in the SPR running buffer.
  - Inject the p5 solutions over the immobilized DnaK surface, followed by a dissociation phase with running buffer.
  - Regenerate the sensor surface between cycles if necessary, using a mild regeneration solution (e.g., a short pulse of low pH glycine).
- Data Analysis:
  - Subtract the reference channel signal from the active channel signal.
  - Fit the resulting sensorgrams to a suitable binding model (e.g., 1:1 Langmuir binding) to determine the association rate (ka), dissociation rate (kd), and equilibrium dissociation constant (Kd).

Isothermal Titration Calorimetry (ITC)

ITC directly measures the heat changes associated with the binding interaction between p5 and DnaK.

- Sample Preparation:

© 2026 BenchChem. All rights reserved.

- Dialyze both DnaK and the p5 peptide extensively against the same buffer (e.g., 25 mM HEPES pH 7.5, 100 mM KCl, 5 mM $MgCl_2$, 1 mM ADP) to minimize buffer mismatch heats.[12][13]
- Degas the solutions before use.

- ITC Experiment:
  - Load the DnaK solution into the sample cell and the p5 peptide solution into the syringe. A typical starting concentration is 20 µM DnaK in the cell and 200 µM p5 in the syringe.[13]
  - Perform a series of injections of the p5 peptide into the DnaK solution while monitoring the heat changes.

- Data Analysis:
  - Integrate the heat pulses and plot them against the molar ratio of p5 to DnaK.
  - Fit the resulting binding isotherm to a suitable model to determine the binding affinity (Kd), stoichiometry (n), and enthalpy of binding (ΔH).

Co-Immunoprecipitation (Co-IP)

Co-IP is used to demonstrate the interaction between p5 and DnaK in a cellular context or with purified components.

- Cell Lysis (for in vivo studies):
  - Lyse cells expressing tagged DnaK in a non-denaturing lysis buffer (e.g., 50 mM Tris-HCl pH 7.5, 150 mM NaCl, 1 mM EDTA, 1% NP-40, and protease inhibitors).

- Immunoprecipitation:
  - Incubate the cell lysate (or a mixture of purified DnaK and p5) with an antibody specific to DnaK (or its tag) for 1-4 hours at 4°C.
  - Add Protein A/G beads and incubate for another 1-2 hours to capture the antibody-protein complexes.

© 2026 BenchChem. All rights reserved.

- Washing:
  - Pellet the beads and wash them 3-5 times with a wash buffer (e.g., lysis buffer with a lower detergent concentration) to remove non-specific binders.
- Elution and Detection:
  - Elute the bound proteins from the beads using a low pH elution buffer or by boiling in SDS-PAGE sample buffer.
  - Analyze the eluate by Western blotting using an antibody against the p5 peptide (or its tag) to confirm its co-precipitation with DnaK.

Visualizations

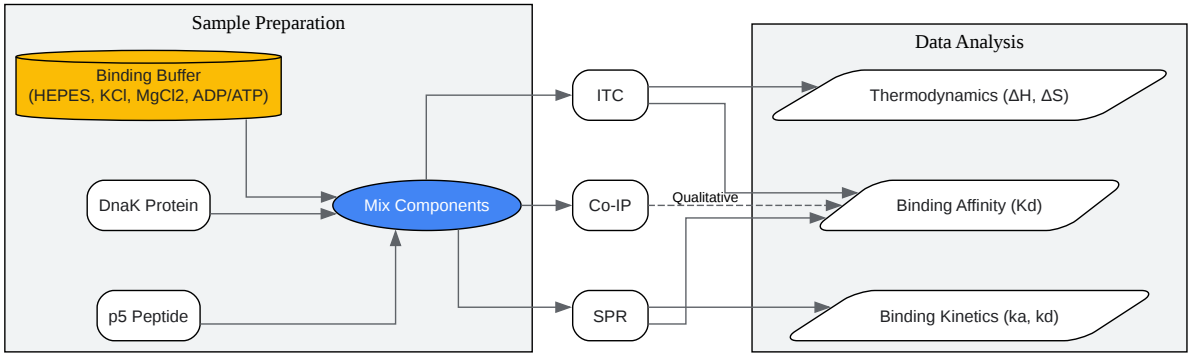

Click to download full resolution via product page

Caption: Experimental workflow for studying p5-DnaK interaction.

© 2026 BenchChem. All rights reserved.

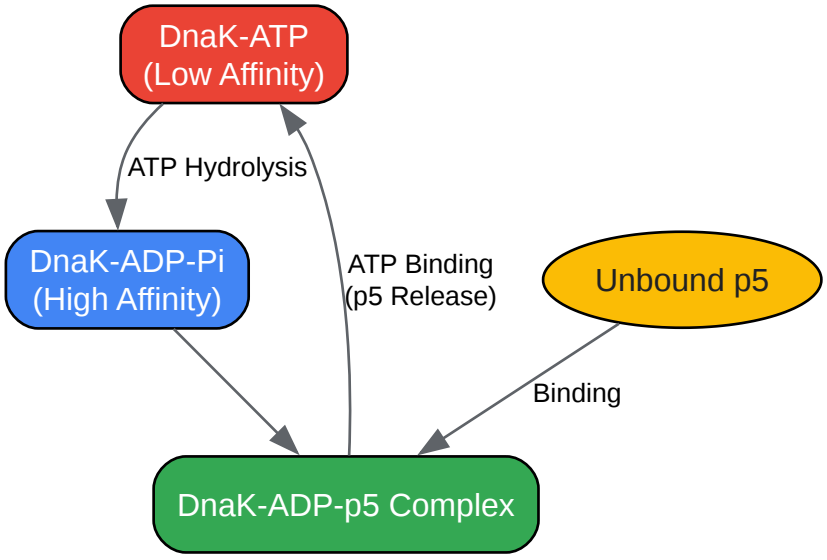

Click to download full resolution via product page

Caption: Simplified DnaK chaperone cycle with p5 substrate.

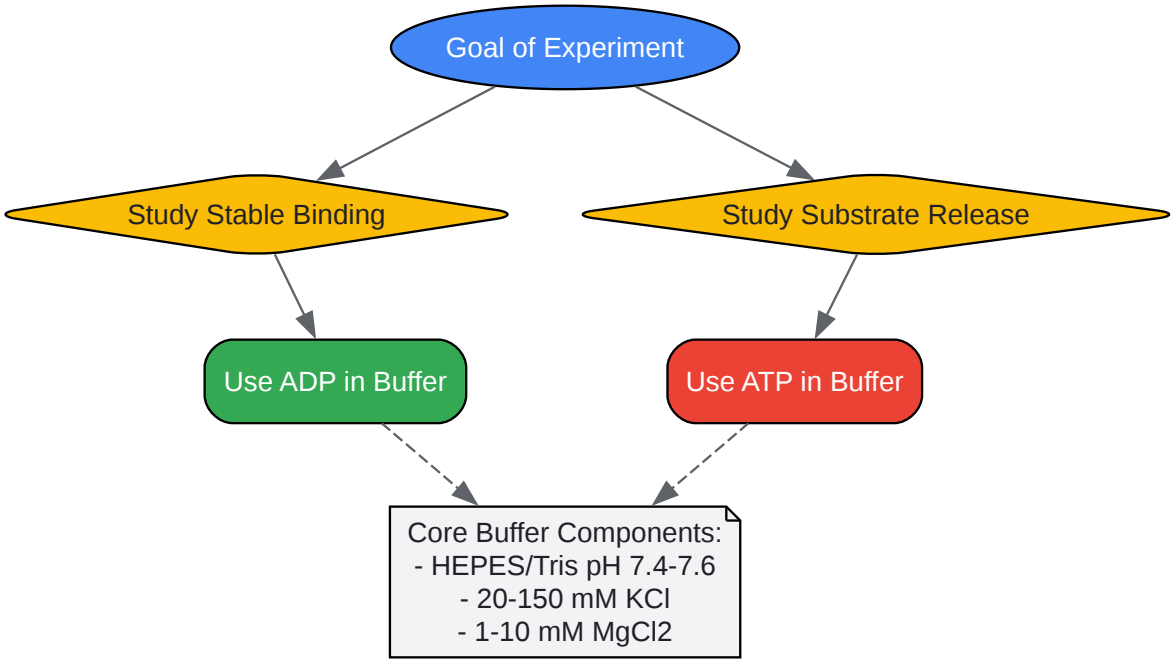

Click to download full resolution via product page

Caption: Logic for selecting nucleotide in p5-DnaK interaction buffer.

© 2026 BenchChem. All rights reserved.

Need Custom Synthesis?

BenchChem offers custom synthesis for rare earth carbides and specific isotopiclabeling.

Email: info@benchchem.com or Request Quote Online.

References

- 1. Binding assay of calreticulin using isothermal titration calorimetry - Glycoscience Protocols (GlycoPODv2) - NCBI Bookshelf [ncbi.nlm.nih.gov]
- 2. researchgate.net [researchgate.net]
- 3. High Throughput Screen for Escherichia coli Heat Shock Protein 70 (Hsp70/DnaK): ATPase Assay in Low Volume By Exploiting Energy Transfer - PMC [pmc.ncbi.nlm.nih.gov]
- 4. ATPase-Defective Derivatives of Escherichia coli DnaK That Behave Differently with Respect to ATP-Induced Conformational Change and Peptide Release - PMC [pmc.ncbi.nlm.nih.gov]
- 5. Bacterial Hsp90 ATPase Assays - PMC [pmc.ncbi.nlm.nih.gov]
- 6. Protein Immunoprecipitation (IP), Co-Immunoprecipitation (Co-IP), and Pulldown Support —Troubleshooting | Thermo Fisher Scientific - SE [thermofisher.com]
- 7. Protein-peptide Interaction by Surface Plasmon Resonance [bio-protocol.org]
- 8. IP Troubleshooting: High Background (Specific or Nonspecific) | Sino Biological [sinobiological.com]
- 9. embopress.org [embopress.org]
- 10. High affinity binding of hydrophobic and autoantigenic regions of proinsulin to the 70 kDa chaperone DnaK - PMC [pmc.ncbi.nlm.nih.gov]
- 11. Conformational Equilibria in Allosteric Control of Hsp70 Chaperones - PMC [pmc.ncbi.nlm.nih.gov]
- 12. Isothermal Titration Calorimetry (ITC) [protocols.io]
- 13. Best Practices for Isothermal Titration Calorimetry to study binding interactions - Part 1 | Malvern Panalytical [malvernpanalytical.com]
- To cite this document: BenchChem. [selecting the appropriate buffer for p5 DnaK interaction studies]. BenchChem, [2026]. [Online PDF]. Available at: [https://www.benchchem.com/product/b12423487/docs#selecting-the-appropriate-buffer-for-p5-dnak-interaction-studies]

© 2026 BenchChem. All rights reserved.

Disclaimer & Data Validity:

The information provided in this document is for Research Use Only (RUO) and is strictly not intended for diagnostic or therapeutic procedures. While BenchChem strives to provide accurate protocols, we make no warranties, express or implied, regarding the fitness of this product for every specific experimental setup.

Technical Support: The protocols provided are for reference purposes. Unsure if this reagent suits your experiment?

Need Industrial/Bulk Grade? Request Custom Synthesis Quote

BenchChem

Our mission is to be the trusted global source of essential and advanced chemicals, empowering scientists and researchers to drive progress in science and industry.

Contact

Address: 3281 E Guasti Rd

Ontario, CA 91761, United States

Phone: (601) 213-4426

Email: info@benchchem.com

Contact our Ph.D. Support Team for a compatibility check

© 2026 BenchChem. All rights reserved.