A Technical Comparison of RF Mixers: CMD178 vs. CMD177C3

Author: BenchChem Technical Support Team. **Date**: April 2026

Compound of Interest

Compound Name:	*CMD178*
Cat. No.:	*B12422540*

Get Quote

For Immediate Release

A detailed comparative analysis of the **CMD178** and CMD177C3, two high-performance double-balanced mixers from Qorvo, is now available for researchers, scientists, and professionals in the field of drug development. This guide provides a comprehensive overview of their performance characteristics, supported by quantitative data and detailed experimental protocols, to aid in the selection of the optimal component for specific application needs.

Performance Overview

The **CMD178** and CMD177C3 are passive mixer MMICs designed for a variety of frequency conversion applications. The primary distinction between the two lies in their operational frequency ranges. The **CMD178** is tailored for higher frequency applications, operating from 11 GHz to 21 GHz, making it suitable for Ku-band and K-band systems. In contrast, the CMD177C3 covers a lower frequency spectrum, from 6 GHz to 14 GHz, targeting C-band and X-band applications.

Both mixers boast key features such as low conversion loss, high isolation between ports, and a wide IF bandwidth, which are critical for maintaining signal integrity in sensitive systems. The

© 2026 BenchChem. All rights reserved.

choice between the **CMD178** and CMD177C3 will largely be dictated by the specific frequency requirements of the intended application.

Quantitative Performance Comparison

The following table summarizes the key performance parameters of the **CMD178** and CMD177C3, as derived from their respective datasheets. This data provides a clear, side-by-side comparison to facilitate component selection.

Feature	CMD178	CMD177C3
RF & LO Frequency Range	11 - 21 GHz	6 - 14 GHz
IF Frequency Range	DC - 6 GHz	DC - 5 GHz
Typical Conversion Loss	6 dB	6.5 dB
Typical LO to RF Isolation	45 dB	43 dB
Typical LO to IF Isolation	45 dB	37 dB
Typical Input P1dB	9 dBm	9.5 dBm
Typical Input IP3	16 dBm	16 dBm
Package Type	Die	3x3 mm QFN

Experimental Protocols

To ensure accurate and reproducible performance characterization of the **CMD178** and CMD177C3 mixers, a standardized experimental setup is recommended. The following protocol outlines the general methodology for measuring key mixer parameters.

Objective: To measure the conversion loss, isolation, and 1 dB compression point (P1dB) of the mixer under test.

Materials:

- Vector Network Analyzer (VNA) with frequency range covering RF, LO, and IF bands of the DUT.

© 2026 BenchChem. All rights reserved.

- Two synthesized signal generators for RF and LO signals.
- Spectrum Analyzer for measuring output power and frequency components.
- DC power supply (if active biasing is required, though these are passive mixers).
- Evaluation board for the respective mixer (e.g., **CMD178**C3-EVB or CMD177C3-EVB).
- High-frequency coaxial cables and connectors.
- 50 Ω terminations.

Procedure:

- Calibration: Perform a full two-port calibration of the VNA and all cables to be used in the test setup to eliminate their effects from the measurement.
- Device Mounting: Securely mount the mixer evaluation board in a test fixture.
- Connections:
  - Connect the RF signal generator to the RF port of the mixer.
  - Connect the LO signal generator to the LO port of the mixer.
  - Connect the IF port of the mixer to the input of the spectrum analyzer or the measurement port of the VNA.
  - Terminate any unused ports with a 50 Ω load.
- Conversion Loss Measurement:
  - Set the LO frequency and power to the desired operating point (e.g., +13 dBm).
  - Set the RF frequency and apply a low-level input power (e.g., -20 dBm).
  - Measure the power of the resulting IF signal on the spectrum analyzer.

© 2026 BenchChem. All rights reserved.

- The conversion loss (in dB) is the difference between the RF input power and the IF output power.
- Sweep the RF and LO frequencies across the operating range to characterize the conversion loss performance.

- Isolation Measurement:
  - To measure LO to RF isolation, disconnect the RF source and measure the LO signal leakage at the RF port using the spectrum analyzer.
  - To measure LO to IF isolation, measure the LO signal leakage at the IF port.
  - To measure RF to IF isolation, turn off the LO signal and measure the RF signal leakage at the IF port.
- Input P1dB Measurement:
  - Set the RF and LO frequencies to the desired test point.
  - Gradually increase the RF input power in small increments (e.g., 1 dB steps).
  - For each input power level, measure the IF output power.
  - The input P1dB is the RF input power level at which the measured conversion loss has decreased by 1 dB from its small-signal value.

Visualizing Signal Flow and Experimental Workflow

To further clarify the operation and testing of these mixers, the following diagrams are provided.

© 2026 BenchChem. All rights reserved.

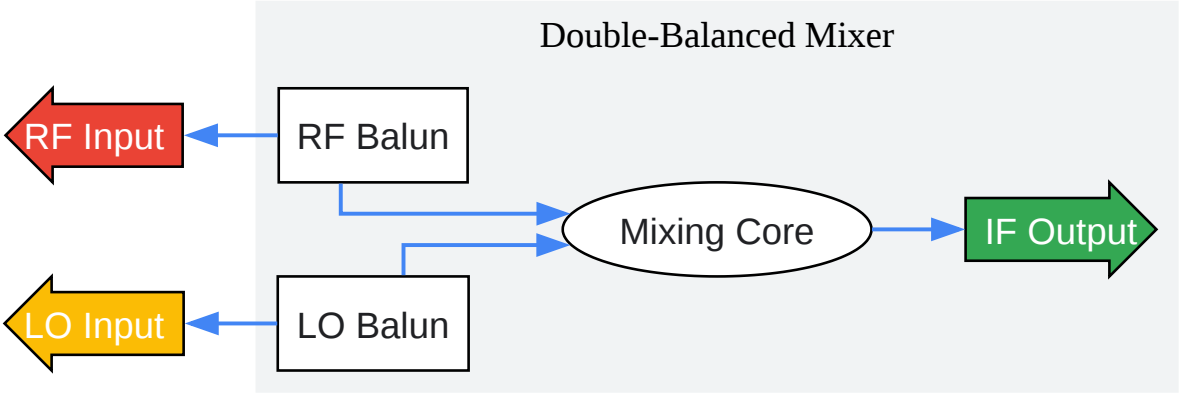

Click to download full resolution via product page

Caption: Signal flow within a double-balanced mixer.

© 2026 BenchChem. All rights reserved.

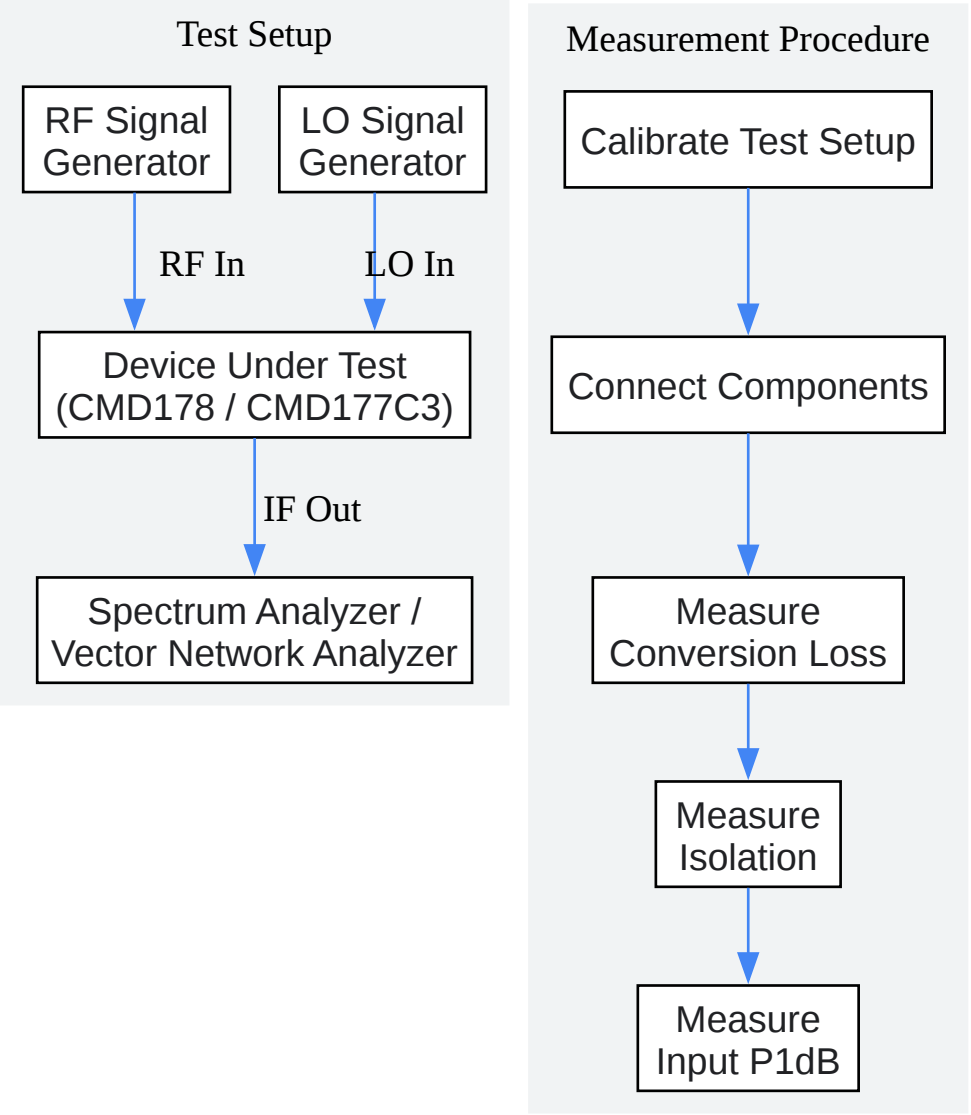

Click to download full resolution via product page

Caption: Generalized experimental workflow for mixer characterization.

- To cite this document: BenchChem. [A Technical Comparison of RF Mixers: CMD178 vs. CMD177C3]. BenchChem, [2026]. [Online PDF]. Available at: [https://www.benchchem.com/product/b12422540/docs#a-technical-comparison-of-rf-mixers-cmd178-vs-cmd177c3]

Disclaimer & Data Validity:

© 2026 BenchChem. All rights reserved.

The information provided in this document is for Research Use Only (RUO) and is strictly not intended for diagnostic or therapeutic procedures. While BenchChem strives to provide accurate protocols, we make no warranties, express or implied, regarding the fitness of this product for every specific experimental setup.

Technical Support: The protocols provided are for reference purposes. Unsure if this reagent suits your experiment?

Need Industrial/Bulk Grade? Request Custom Synthesis Quote

BenchChem

Our mission is to be the trusted global source of essential and advanced chemicals, empowering scientists and researchers to drive progress in science and industry.

Contact

Address: 3281 E Guasti Rd

Ontario, CA 91761, United States

Phone: (601) 213-4426

Email: info@benchchem.com

Contact our Ph.D. Support Team for a compatibility check

© 2026 BenchChem. All rights reserved.