# [D-Asn5]-Oxytocin: A Technical Overview of an Oxytocin Receptor Modulator

**Author**: BenchChem Technical Support Team. **Date**: April 2026

***Compound of Interest***

| | |
|---|---|
| *Compound Name:* | *[D-Asn5]-Oxytocin* |
| *Cat. No.:* | *B12421045* |

*Get Quote*

For Researchers, Scientists, and Drug Development Professionals

## Abstract

**[D-Asn5]-Oxytocin** is a synthetic analog of the neuropeptide hormone oxytocin, characterized by the substitution of the L-asparagine residue at position 5 with its D-enantiomer. This modification results in a modulator of the oxytocin receptor with a distinct pharmacological profile. While exhibiting very low specific oxytocic and vasodepressor activities, it retains an intrinsic activity comparable to native oxytocin in eliciting uterine contractions[1]. This technical guide provides a comprehensive overview of **[D-Asn5]-Oxytocin**, including its synthesis, pharmacological properties, and the signaling pathways it is presumed to modulate. Detailed experimental protocols for its characterization are also presented to facilitate further research and development.

## Introduction

Oxytocin is a nonapeptide hormone primarily recognized for its role in uterine contraction during parturition and lactation[2][3]. Its receptor, a member of the G-protein coupled receptor (GPCR) superfamily, is a key target for therapeutic intervention in various physiological and pathological conditions, including labor induction, postpartum hemorrhage, and potentially

© 2026 BenchChem. All rights reserved.

neuropsychiatric disorders[2][4]. The modification of the oxytocin molecule has been a strategy to develop analogs with altered potency, selectivity, and pharmacokinetic profiles. The substitution at the 5th position, as seen in **[D-Asn5]-Oxytocin**, has been shown to significantly impact the molecule's interaction with the oxytocin receptor[1]. This document serves as a technical resource on **[D-Asn5]-Oxytocin**, summarizing its known characteristics and providing detailed methodologies for its study.

## Physicochemical Properties

| Property | Value | Reference |
|---|---|---|
| Molecular Formula | C43H66N12O12S2 | MedChemExpress, Simson Pharma |
| Molecular Weight | 1007.19 g/mol | MedChemExpress, Simson Pharma |
| CAS Number | 5754-53-0 | MedChemExpress, Simson Pharma |
| Sequence | CYIQ-[D-Asn]-CPLG-NH2 (Disulfide bridge: Cys1-Cys6) | MedChemExpress |

## Pharmacology

The primary pharmacological data for **[D-Asn5]-Oxytocin** originates from the foundational study by Dutta et al. (1966).

© 2026 BenchChem. All rights reserved.

| Assay | Observation | Quantitative Data | Reference |
|---|---|---|---|
| In Vitro Uterotonic Activity (Rat Uterus) | Possesses very low specific oxytocic activity, but demonstrates a similar intrinsic activity to oxytocin in cumulative dose-response studies. | Specific potency values (e.g., EC50) are not publicly available but are qualitatively described as low. | Dutta et al. (1966) as cited by multiple sources[1] |
| In Vivo Vasopressor Activity (Rat) | Exhibits very low specific vasodepressor activity. | Specific quantitative data is not publicly available. | Dutta et al. (1966) as cited by multiple sources[1] |

# Presumed Signaling Pathways

As an analog of oxytocin with demonstrated intrinsic activity, **[D-Asn5]-Oxytocin** is expected to activate the canonical signaling pathways associated with the oxytocin receptor. The oxytocin receptor is known to couple to multiple G-proteins, primarily Gq/11 and to a lesser extent, Gi[5][6].

## Gq/11 Signaling Pathway

Activation of the Gq/11 pathway is the principal mechanism for oxytocin-induced smooth muscle contraction.

© 2026 BenchChem. All rights reserved.

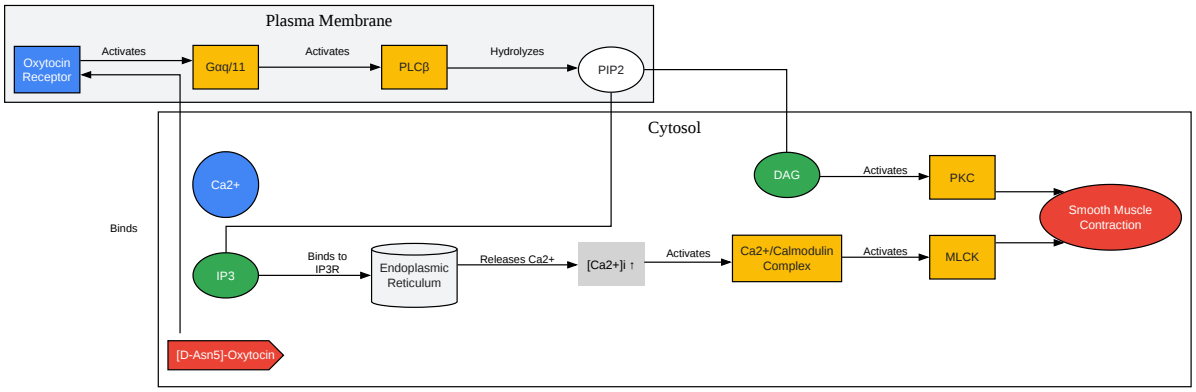


Click to download full resolution via product page

Gq/11-mediated signaling cascade initiated by **[D-Asn5]-Oxytocin**.

## Gi Signaling Pathway

The oxytocin receptor can also couple to Gi, leading to the inhibition of adenylyl cyclase and a decrease in intracellular cAMP levels.

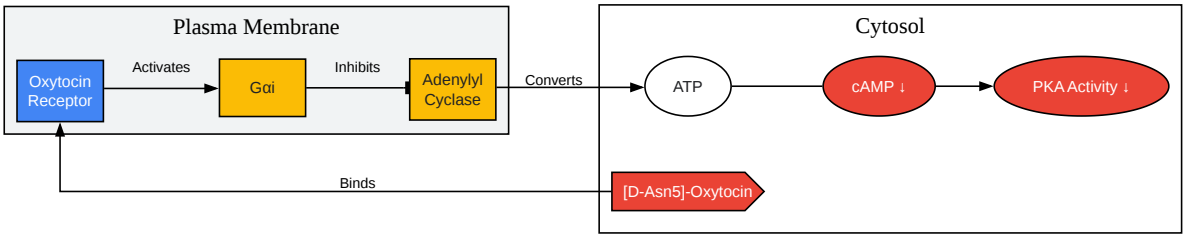


© 2026 BenchChem. All rights reserved.

Click to download full resolution via product page

Gi-mediated signaling cascade modulated by **[D-Asn5]-Oxytocin**.

# Experimental Protocols

The following are representative protocols for the synthesis and pharmacological characterization of **[D-Asn5]-Oxytocin**, based on established methods for oxytocin analogs. The specific details of the original protocols by Dutta et al. (1966) are not publicly available.

## Synthesis and Purification by Solid-Phase Peptide Synthesis (SPPS)

© 2026 BenchChem. All rights reserved.

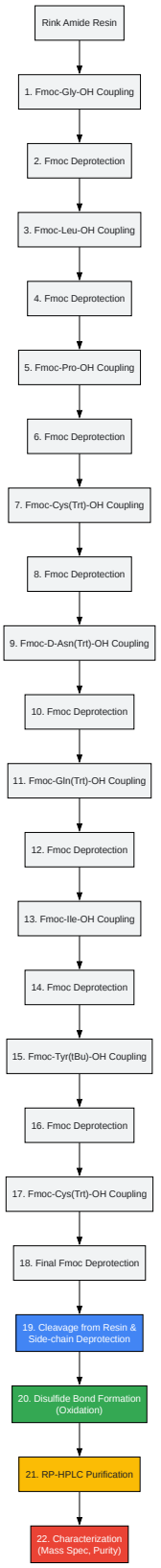


Click to download full resolution via product page

Workflow for the synthesis of **[D-Asn5]-Oxytocin** via SPPS.

© 2026 BenchChem. All rights reserved.

Protocol:

- Resin Swelling: Swell Rink Amide resin in dimethylformamide (DMF).
- Fmoc Deprotection: Treat the resin with 20% piperidine in DMF to remove the Fmoc protecting group.
- Amino Acid Coupling: Sequentially couple Fmoc-protected amino acids (Fmoc-Gly-OH, Fmoc-Leu-OH, Fmoc-Pro-OH, Fmoc-Cys(Trt)-OH, Fmoc-D-Asn(Trt)-OH, Fmoc-Gln(Trt)-OH, Fmoc-Ile-OH, Fmoc-Tyr(tBu)-OH, Fmoc-Cys(Trt)-OH) using a coupling agent such as HBTU/DIPEA in DMF.
- Cleavage and Deprotection: Cleave the peptide from the resin and remove side-chain protecting groups using a cleavage cocktail (e.g., trifluoroacetic acid/triisopropylsilane/water).
- Cyclization: Oxidize the two cysteine residues to form the disulfide bridge in a dilute aqueous solution at a slightly alkaline pH.
- Purification: Purify the crude peptide by reverse-phase high-performance liquid chromatography (RP-HPLC).
- Characterization: Confirm the identity and purity of the final product by mass spectrometry and analytical HPLC.

## In Vitro Uterotonic Activity Assay

Protocol:

- Tissue Preparation: Isolate uterine horns from a diestrus or estrogen-primed female rat and mount in an organ bath containing De Jalon's solution at 32°C, bubbled with carbogen (95% O2, 5% CO2).
- Equilibration: Allow the tissue to equilibrate under a resting tension of 1 g for at least 60 minutes.
- Cumulative Dose-Response: Add increasing concentrations of **[D-Asn5]-Oxytocin** (and oxytocin as a positive control) to the organ bath in a cumulative manner.

© 2026 BenchChem. All rights reserved.

- Data Acquisition: Record the isometric contractions using a force-displacement transducer connected to a data acquisition system.
- Analysis: Measure the amplitude of contractions at each concentration and construct dose-response curves to determine potency (EC50) and intrinsic activity relative to oxytocin.

## In Vivo Vasopressor Assay

Protocol:

- Animal Preparation: Anesthetize a male rat and cannulate the carotid artery to monitor blood pressure and the jugular vein for drug administration.
- Baseline Measurement: After a stabilization period, record the baseline mean arterial pressure.
- Drug Administration: Administer bolus intravenous injections of increasing doses of **[D-Asn5]-Oxytocin** and a standard vasopressor agent (e.g., arginine vasopressin).
- Data Recording: Continuously record the blood pressure response.
- Analysis: Determine the change in mean arterial pressure for each dose and construct dose-response curves.

## Calcium Mobilization Assay

Protocol:

- Cell Culture: Culture cells stably expressing the human oxytocin receptor (e.g., CHO-K1 or HEK293 cells) in a 96-well black-walled plate.
- Dye Loading: Load the cells with a calcium-sensitive fluorescent dye (e.g., Fluo-4 AM) in a suitable buffer.
- Compound Addition: Add varying concentrations of **[D-Asn5]-Oxytocin** to the wells.
- Fluorescence Measurement: Measure the change in fluorescence intensity over time using a fluorescence plate reader.

© 2026 BenchChem. All rights reserved.

- Data Analysis: Plot the peak fluorescence response against the logarithm of the agonist concentration to determine the EC50 value.

## Conclusion

**[D-Asn5]-Oxytocin** represents an intriguing modification of the native oxytocin peptide. Its pharmacological profile, characterized by low specific activity but preserved intrinsic efficacy, suggests a complex interaction with the oxytocin receptor. This technical guide provides a foundational understanding of this compound, compiling its known properties and offering detailed, representative protocols for its synthesis and evaluation. Further research is warranted to fully elucidate its receptor binding kinetics, downstream signaling consequences, and potential therapeutic applications. The methodologies and data presented herein are intended to serve as a valuable resource for scientists and researchers in the fields of pharmacology, medicinal chemistry, and drug development.

***Need Custom Synthesis?***

*BenchChem offers custom synthesis for rare earth carbides and specific isotopiclabeling.*

*Email: info@benchchem.com or Request Quote Online.*

## References

- 1. [D-Asn5]-Oxytocin | TargetMol [targetmol.com]
- 2. Oxytocin: physiology, pharmacology, and clinical application for labor management - PubMed [pubmed.ncbi.nlm.nih.gov]
- 3. The physiology and pharmacology of oxytocin in labor and in the peripartum period - PubMed [pubmed.ncbi.nlm.nih.gov]
- 4. Oxytocin - StatPearls - NCBI Bookshelf [ncbi.nlm.nih.gov]
- 5. researchgate.net [researchgate.net]
- 6. creative-diagnostics.com [creative-diagnostics.com]
- To cite this document: BenchChem. [[D-Asn5]-Oxytocin: A Technical Overview of an Oxytocin Receptor Modulator]. BenchChem, [2026]. [Online PDF]. Available at: [https://www.benchchem.com/product/b12421045/docs#d-asn5-oxytocin-a-technical-overview-of-an-oxytocin-receptor-modulator]

© 2026 BenchChem. All rights reserved.

**Disclaimer & Data Validity:**

The information provided in this document is for Research Use Only (RUO) and is strictly not intended for diagnostic or therapeutic procedures. While BenchChem strives to provide accurate protocols, we make no warranties, express or implied, regarding the fitness of this product for every specific experimental setup.

**Technical Support:**The protocols provided are for reference purposes. Unsure if this reagent suits your experiment?

**Need Industrial/Bulk Grade?** Request Custom Synthesis Quote

# BenchChem

Our mission is to be the trusted global source of essential and advanced chemicals, empowering scientists and researchers to drive progress in science and industry.

Contact

Address: 3281 E Guasti Rd

Ontario, CA 91761, United States

Phone: (601) 213-4426

Email: info@benchchem.com

Contact our Ph.D. Support Team for a compatibility check

© 2026 BenchChem. All rights reserved.