Navigating S1PR1 Agonist 1 Experiments: A Technical Support Center

Author: BenchChem Technical Support Team. **Date**: April 2026

Compound of Interest

Compound Name:	*S1PR1 agonist 1*
Cat. No.:	*B12420685*

Get Quote

For Researchers, Scientists, and Drug Development Professionals

This technical support center provides troubleshooting guidance and frequently asked questions (FAQs) to address common challenges encountered during experiments involving **S1PR1 agonist 1**. The information is designed to help researchers mitigate off-target effects and ensure the accuracy and reproducibility of their results.

Frequently Asked Questions (FAQs)

Here, we address common issues and questions that arise during the use of **S1PR1 agonist 1** in experimental settings.

Q1: My in vitro experiment with **S1PR1 agonist 1** is showing unexpected levels of cell death. What could be the cause?

A1: Unexpected cytotoxicity can stem from several factors:

- Off-target effects: **S1PR1 agonist 1** may have activity at other S1P receptors (S1PRs) that can induce pro-apoptotic signaling. For example, prolonged activation of S1PR2 or S1PR3 has been implicated in cellular stress pathways.

© 2026 BenchChem. All rights reserved.

- Cell line sensitivity: The specific cell line you are using may have a unique expression profile of S1P receptors, making it more susceptible to off-target effects.
- Agonist concentration and exposure time: High concentrations or prolonged exposure to the agonist can lead to receptor overstimulation and subsequent cellular stress.
- Functional antagonism: While initially acting as an agonist, prolonged exposure to some S1PR1 agonists can lead to receptor internalization and degradation, effectively creating a functional antagonist scenario. This can disrupt normal S1P signaling required for cell survival in some cell types.[1]

Troubleshooting Steps:

- Confirm S1PR Expression: Verify the expression levels of all five S1P receptors (S1PR1-5) in your cell line using qPCR or Western blotting.
- Dose-Response and Time-Course: Perform a thorough dose-response and time-course experiment to identify the optimal concentration and duration of treatment that elicits the desired on-target effect without causing significant cell death.
- Use Selective Antagonists: To confirm if the cytotoxicity is mediated by a specific off-target receptor, co-treat cells with your S1PR1 agonist and a selective antagonist for other S1PRs (e.g., a selective S1PR3 antagonist).
- Control for Functional Antagonism: Assess S1PR1 protein levels on the cell surface via flow cytometry or Western blot after treatment to determine if receptor downregulation is occurring.

Q2: I am observing cardiovascular side effects (e.g., bradycardia, hypertension) in my in vivo animal models. How can I determine if this is an off-target effect?

A2: Cardiovascular side effects are common with S1P receptor modulators.

- Bradycardia (decreased heart rate): This is often an on-target effect of S1PR1 agonism on atrial myocytes.[2][3] However, S1PR3 agonism can also contribute to this effect.[4]

© 2026 BenchChem. All rights reserved.

- Hypertension (increased blood pressure): This is typically considered an off-target effect mediated by agonism at S1PR2 and S1PR3 on vascular smooth muscle cells, leading to vasoconstriction.[2]

Troubleshooting and Investigation:

- Use a More Selective S1PR1 Agonist: If available, compare the effects of your current agonist with a more highly selective S1PR1 agonist. A reduction in the hypertensive response with a more selective compound would suggest the effect is mediated by other S1PR subtypes.

- Pharmacological Blockade: In your animal model, co-administer selective antagonists for S1PR2 and/or S1PR3 with your S1PR1 agonist to see if the cardiovascular side effects are mitigated.

- Examine Dose-Dependency: The magnitude of these cardiovascular effects is often dose-dependent. Determine if a lower effective dose of your S1PR1 agonist can achieve the desired therapeutic effect with a reduced cardiovascular liability.

- Monitor Onset and Duration: Bradycardia is often a transient "first-dose" effect that diminishes with continued treatment due to receptor downregulation. Carefully chart the time course of the cardiovascular changes in relation to drug administration.

Q3: My in vitro and in vivo results with the same S1PR1 agonist are conflicting. What could explain this discrepancy?

A3: Discrepancies between in vitro and in vivo results are common and can be attributed to:

- Pharmacokinetics and Metabolism: In vivo, the agonist is subject to absorption, distribution, metabolism, and excretion (ADME). The parent compound may be metabolized into active or inactive forms, and the concentration of the agonist reaching the target tissue may be very different from the concentration used in vitro. For example, the well-known S1P modulator fingolimod is a prodrug that requires phosphorylation in vivo to become active.

- Complex Biological Environment: In vivo, the agonist interacts with a complex system of cells, tissues, and circulating factors that are absent in a simplified in vitro culture. The

© 2026 BenchChem. All rights reserved.

presence of endogenous S1P in different tissues and fluids can compete with the agonist and influence its effects.

- Functional Antagonism: As mentioned, prolonged exposure in vivo is more likely to induce receptor downregulation and functional antagonism, which may not be fully recapitulated in short-term in vitro experiments.
- Off-Target Effects in Different Tissues: An off-target effect that is not apparent in your in vitro cell type may become significant in vivo due to the expression of the off-target receptor in other tissues.

Troubleshooting Strategy:

- Review Pharmacokinetic Data: If available, review the pharmacokinetic profile of your agonist.
- In Vitro Model Refinement: Consider using more complex in vitro models, such as co-cultures or organoids, that better mimic the in vivo environment.
- Measure Target Engagement In Vivo: If possible, use techniques like positron emission tomography (PET) with a radiolabeled ligand to confirm that your agonist is reaching and binding to S1PR1 in the target tissue in vivo.
- Paired In Vitro/Ex Vivo Analysis: Collect tissues from your in vivo studies and perform ex vivo analyses (e.g., Western blotting for signaling markers) to see if the molecular responses are consistent with your in vitro findings.

Quantitative Data Summary

The selectivity of an S1PR1 agonist is a critical factor in minimizing off-target effects. The following table summarizes the potency (EC50) and binding affinity (Ki) of several common S1P receptor modulators across the different S1P receptor subtypes. Lower values indicate higher potency/affinity.

© 2026 BenchChem. All rights reserved.

Compound	S1PR1	S1PR2	S1PR3	S1PR4	S1PR5
Fingolimod (FTY720-P)	EC50: 0.3 nM	>10,000 nM	EC50: 1.2 nM	EC50: 0.9 nM	EC50: 0.3 nM
Ozanimod	EC50: 0.41 nM	>10,000 nM	>10,000 nM	>10,000 nM	EC50: 27.4 nM
Ponesimod	EC50: 5.7 nM	>10,000 nM	>10,000 nM	>10,000 nM	>10,000 nM
Siponimod (BAF312)	EC50: 0.39 nM	>1000-fold selective	>1000-fold selective	>1000-fold selective	EC50: 0.98 nM
SEW2871	EC50: 13 nM	>10,000 nM	>10,000 nM	>10,000 nM	>10,000 nM

Data compiled from multiple sources. EC50 and Ki values can vary depending on the assay conditions.

Experimental Protocols & Methodologies

To aid in the characterization of S1PR1 agonist activity and the identification of off-target effects, detailed protocols for key experiments are provided below.

S1PR Subtype Selectivity Profiling: Radioligand Binding Assay

This assay is used to determine the binding affinity (Ki) of a test compound for each of the S1P receptor subtypes.

Principle: A radiolabeled ligand with known affinity for the S1P receptors is used to label the receptors in a cell membrane preparation. The ability of an unlabeled test compound (your S1PR1 agonist) to displace the radioligand is measured.

Detailed Methodology:

- Membrane Preparation:
  - Culture cells stably overexpressing a single human S1P receptor subtype (e.g., HEK293-hS1PR1).

© 2026 BenchChem. All rights reserved.

- Harvest cells and homogenize in a cold lysis buffer.
- Centrifuge the homogenate to pellet the cell membranes.
- Wash the membrane pellet and resuspend in an appropriate assay buffer. Determine the protein concentration.

- Competitive Binding Assay:
  - In a 96-well plate, add a fixed concentration of a suitable radioligand (e.g., [^{32}P]S1P).
  - Add increasing concentrations of the unlabeled test compound.
  - Add the cell membrane preparation to initiate the binding reaction.
  - Incubate to allow the binding to reach equilibrium.
  - Terminate the reaction by rapid filtration through a glass fiber filter plate to separate bound from free radioligand.
  - Wash the filters with cold wash buffer.
  - Measure the radioactivity retained on the filters using a scintillation counter.
- Data Analysis:
  - Plot the percentage of specific binding of the radioligand against the concentration of the test compound.
  - Fit the data to a one-site competition model to determine the IC50 value (the concentration of test compound that inhibits 50% of specific radioligand binding).
  - Calculate the Ki value using the Cheng-Prusoff equation: Ki = IC50 / (1 + [L]/Kd), where [L] is the concentration of the radioligand and Kd is its dissociation constant.

Functional Off-Target Assessment: Calcium Mobilization Assay

© 2026 BenchChem. All rights reserved.

This assay is used to assess agonist activity at Gq-coupled S1P receptors (S1PR2 and S1PR3), which signal through the release of intracellular calcium.

Principle: Cells expressing the target receptor are loaded with a calcium-sensitive fluorescent dye. Agonist binding to a Gq-coupled receptor triggers the release of calcium from intracellular stores, leading to an increase in fluorescence.

Detailed Methodology:

- Cell Preparation:
  - Plate cells stably expressing the S1P receptor of interest (e.g., CHO-hS1PR3) in a 96-well black-walled, clear-bottom plate.
  - Allow cells to adhere and grow to near confluence.
- Dye Loading:
  - Prepare a loading buffer containing a calcium-sensitive dye (e.g., Fluo-4 AM or Fura-2 AM).
  - Remove the cell culture medium and add the dye-loading buffer to the cells.
  - Incubate to allow the dye to enter the cells and be cleaved to its active form.
- Agonist Stimulation and Measurement:
  - Place the plate in a fluorescence plate reader with automated injection capabilities (e.g., a FlexStation).
  - Establish a baseline fluorescence reading.
  - Inject a solution of the S1PR1 agonist at various concentrations.
  - Immediately begin recording the fluorescence intensity over time.
- Data Analysis:

© 2026 BenchChem. All rights reserved.

- Calculate the change in fluorescence from baseline for each concentration of the agonist.
- Plot the peak fluorescence change against the agonist concentration.
- Fit the data to a dose-response curve to determine the EC50 value.

On-Target Signaling Assessment: ERK Phosphorylation Western Blot

This assay measures the activation of a key downstream signaling pathway for S1PR1, the MAPK/ERK pathway.

Principle: S1PR1 activation leads to the phosphorylation of ERK1/2. This can be detected by Western blotting using an antibody specific for the phosphorylated form of ERK.

Detailed Methodology:

- Cell Treatment and Lysis:
  - Plate cells of interest and serum-starve overnight to reduce baseline signaling.
  - Treat cells with the S1PR1 agonist for various times (e.g., 5, 15, 30, 60 minutes).
  - Wash cells with ice-cold PBS and lyse with a radioimmunoprecipitation assay (RIPA) buffer containing protease and phosphatase inhibitors.
  - Clarify the lysates by centrifugation.
- Western Blotting:
  - Determine the protein concentration of the lysates.
  - Separate equal amounts of protein by SDS-PAGE and transfer to a PVDF or nitrocellulose membrane.
  - Block the membrane with 5% BSA or non-fat milk in Tris-buffered saline with Tween-20 (TBST).

© 2026 BenchChem. All rights reserved.

- Incubate the membrane with a primary antibody against phospho-ERK1/2 overnight at 4°C.
- Wash the membrane with TBST and incubate with a horseradish peroxidase (HRP)-conjugated secondary antibody.
- Wash again and detect the signal using an enhanced chemiluminescence (ECL) substrate.

- Data Analysis:
  - Quantify the band intensities for phospho-ERK.
  - To normalize for protein loading, strip the membrane and re-probe with an antibody against total ERK.
  - Express the results as the ratio of phospho-ERK to total ERK.

Visualizations

S1PR1 Signaling Pathways

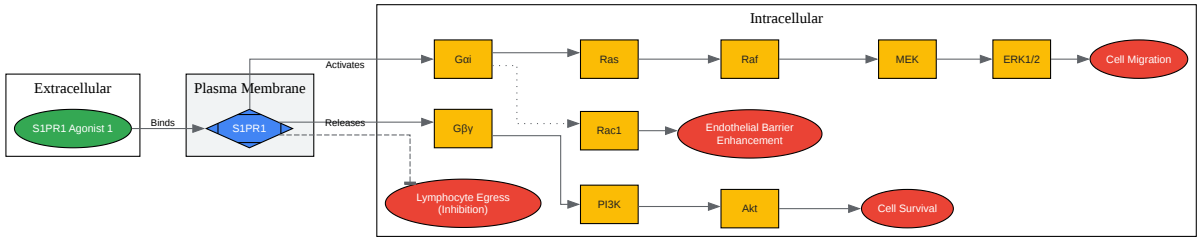

Click to download full resolution via product page

© 2026 BenchChem. All rights reserved.

Caption: On-target signaling pathways of S1PR1 activation.

Off-Target S1PR Signaling

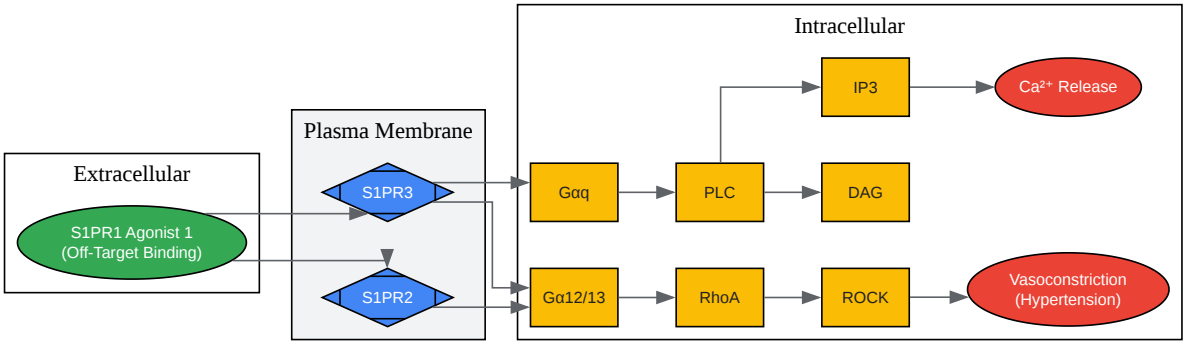

Click to download full resolution via product page

Caption: Common off-target signaling via S1PR2 and S1PR3.

Experimental Workflow: Assessing Agonist Selectivity

© 2026 BenchChem. All rights reserved.

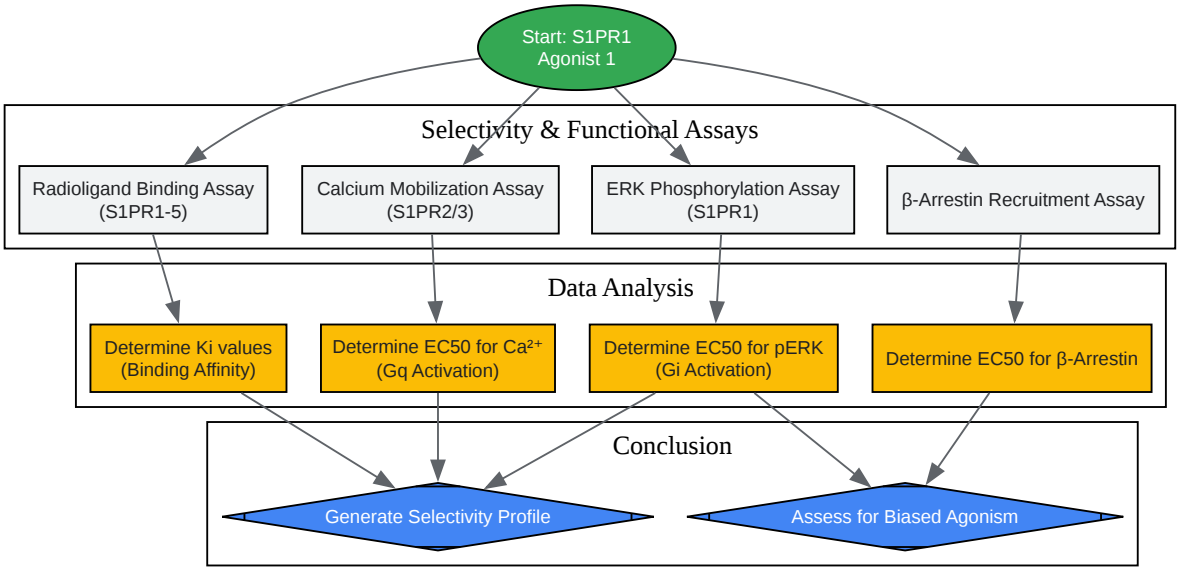

Click to download full resolution via product page

Caption: Workflow for characterizing agonist selectivity and bias.

Need Custom Synthesis?

BenchChem offers custom synthesis for rare earth carbides and specific isotopiclabeling.

Email: info@benchchem.com or Request Quote Online.

References

- 1. Discovery of a Selective S1P1 Receptor Agonist Efficacious at Low Oral Dose and Devoid of Effects on Heart Rate - PubMed [pubmed.ncbi.nlm.nih.gov]
- 2. S1P(1) receptor agonists: Assessment of selectivity and current clinical activity - PubMed [pubmed.ncbi.nlm.nih.gov]
- 3. researchgate.net [researchgate.net]

© 2026 BenchChem. All rights reserved.

- 4. Investigating the Mitoprotective Effects of S1P Receptor Modulators Ex Vivo Using a Novel Semi-Automated Live Imaging Set-Up [mdpi.com]
- To cite this document: BenchChem. [Navigating S1PR1 Agonist 1 Experiments: A Technical Support Center]. BenchChem, [2026]. [Online PDF]. Available at: [https://www.benchchem.com/product/b12420685/docs#navigating-s1pr1-agonist-1-experiments-a-technical-support-center]

Disclaimer & Data Validity:

The information provided in this document is for Research Use Only (RUO) and is strictly not intended for diagnostic or therapeutic procedures. While BenchChem strives to provide accurate protocols, we make no warranties, express or implied, regarding the fitness of this product for every specific experimental setup.

Technical Support: The protocols provided are for reference purposes. Unsure if this reagent suits your experiment?

Need Industrial/Bulk Grade? Request Custom Synthesis Quote

BenchChem

Our mission is to be the trusted global source of essential and advanced chemicals, empowering scientists and researchers to drive progress in science and industry.

Contact

Address: 3281 E Guasti Rd

Ontario, CA 91761, United States

Phone: (601) 213-4426

Email: info@benchchem.com

Contact our Ph.D. Support Team for a compatibility check