Application Notes and Protocols for Egfr-IN-30

Author: BenchChem Technical Support Team. **Date**: April 2026

Compound of Interest

Compound Name:	*Egfr-IN-30*
Cat. No.:	*B12418872*

Get Quote

For Researchers, Scientists, and Drug Development Professionals

These comprehensive application notes detail the use of **Egfr-IN-30**, a potent inhibitor of the Epidermal Growth Factor Receptor (EGFR), including its mutant forms. This document provides purchasing information, key technical data, and detailed experimental protocols for in vitro and in vivo research applications.

Product Information and Supplier

Egfr-IN-30 is a highly selective and potent inhibitor of EGFR, demonstrating significant activity against wild-type (WT) EGFR and clinically relevant mutant forms, including the C797S resistance mutation.

Supplier Information:

Supplier	Catalog Number	CAS Number	Molecular Formula	Molecular Weight
MedChemExpress	HY-144044	2726463-68-7	$C_{28}H_{33}BrN_7O_2P$	610.49 g/mol

© 2026 BenchChem. All rights reserved.

Purchasing: **Egfr-IN-30** can be purchased directly from MedChemExpress. For current pricing and availability, please visit their website.

Technical Data: In Vitro Inhibitory Activity

Egfr-IN-30 has been characterized by its potent inhibitory activity against various forms of the EGFR kinase and in cell-based assays.[1][2]

Table 1: Biochemical IC_{50} Values for **Egfr-IN-30**

Target	IC_{50}
EGFR (Wild-Type)	1-10 nM
EGFR (L858R/T790M/C797S)	<1 nM

Table 2: Cell-Based IC_{50} Values for **Egfr-IN-30**[1][2]

Cell Line	EGFR Status	IC_{50}
A431	Wild-Type (overexpressed)	100-1000 nM
Ba/F3_L858R/T790M/C797S	Mutant	<10 nM
Ba/F3_Del19/T790M/C797S	Mutant	<10 nM

EGFR Signaling Pathway and Mechanism of Action of **Egfr-IN-30**

The Epidermal Growth Factor Receptor (EGFR) is a receptor tyrosine kinase that, upon activation by ligands such as EGF, dimerizes and autophosphorylates, initiating downstream signaling cascades like the RAS-RAF-MEK-ERK (MAPK) and PI3K-AKT-mTOR pathways. These pathways are crucial for cell proliferation, survival, and differentiation.[3] Mutations in EGFR can lead to its constitutive activation, driving tumorigenesis. Third-generation EGFR inhibitors, such as osimertinib, are effective against the T790M resistance mutation but are rendered ineffective by the subsequent C797S mutation. **Egfr-IN-30** is designed to inhibit EGFR even in the presence of the C797S mutation.[3][4][5]

© 2026 BenchChem. All rights reserved.

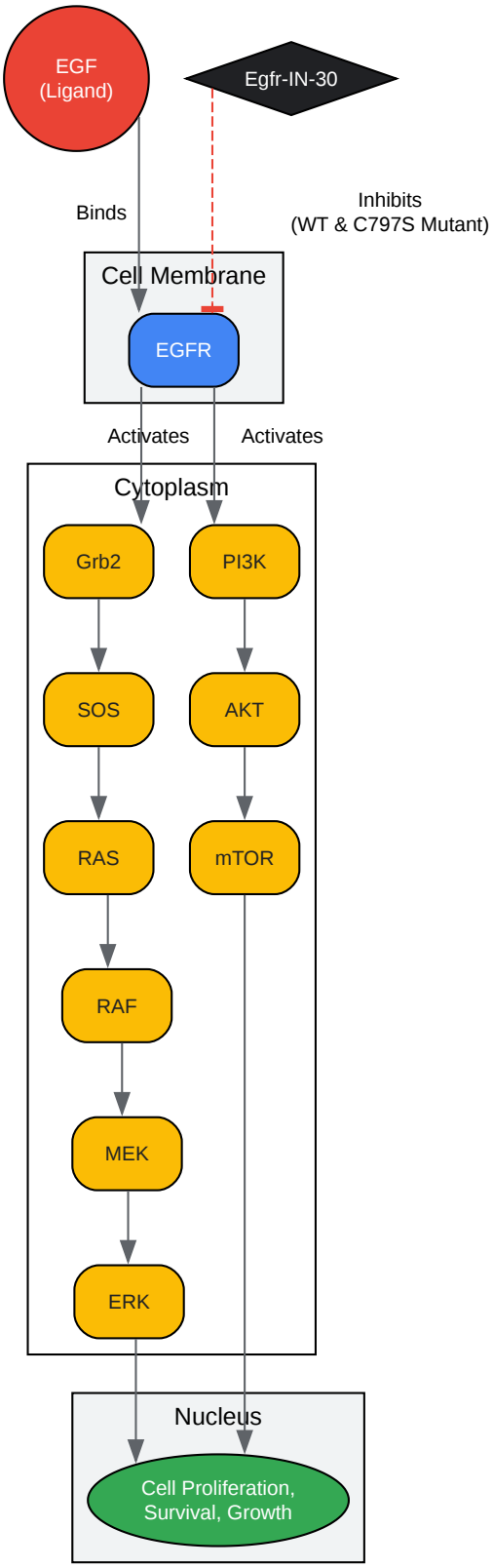

Click to download full resolution via product page

Caption: EGFR Signaling Pathway and Inhibition by **Egfr-IN-30**.

© 2026 BenchChem. All rights reserved.

Experimental Protocols

In Vitro Cell Viability Assay (MTT Assay)

This protocol is designed to determine the IC_{50} of **Egfr-IN-30** in cancer cell lines.

Materials:

- Cancer cell lines (e.g., A431, Ba/F3 with EGFR mutations)
- Complete cell culture medium (e.g., DMEM with 10% FBS)
- **Egfr-IN-30**
- DMSO (for stock solution)
- 96-well plates
- MTT (3-(4,5-dimethylthiazol-2-yl)-2,5-diphenyltetrazolium bromide) solution
- Solubilization buffer (e.g., DMSO or a solution of 10% SDS in 0.01 M HCl)
- Microplate reader

Procedure:

- Cell Seeding: Seed cells in a 96-well plate at a density of 5,000-10,000 cells/well in 100 µL of complete medium and incubate for 24 hours.[1]
- Compound Preparation: Prepare a 10 mM stock solution of **Egfr-IN-30** in DMSO. Create a serial dilution of **Egfr-IN-30** in complete medium to achieve final concentrations ranging from 1 nM to 10 µM.
- Cell Treatment: Replace the medium with 100 µL of medium containing the various concentrations of **Egfr-IN-30**. Include a vehicle control (DMSO) and a no-cell control.
- Incubation: Incubate the plate for 72 hours at 37°C in a 5% CO_2 incubator.

© 2026 BenchChem. All rights reserved.

- MTT Addition: Add 10 µL of MTT solution (5 mg/mL in PBS) to each well and incubate for 4 hours.
- Solubilization: Add 100 µL of solubilization buffer to each well and incubate overnight to dissolve the formazan crystals.
- Data Acquisition: Measure the absorbance at 570 nm using a microplate reader.
- Data Analysis: Calculate the percentage of cell viability relative to the vehicle control and determine the IC_{50} value by plotting a dose-response curve.

© 2026 BenchChem. All rights reserved.

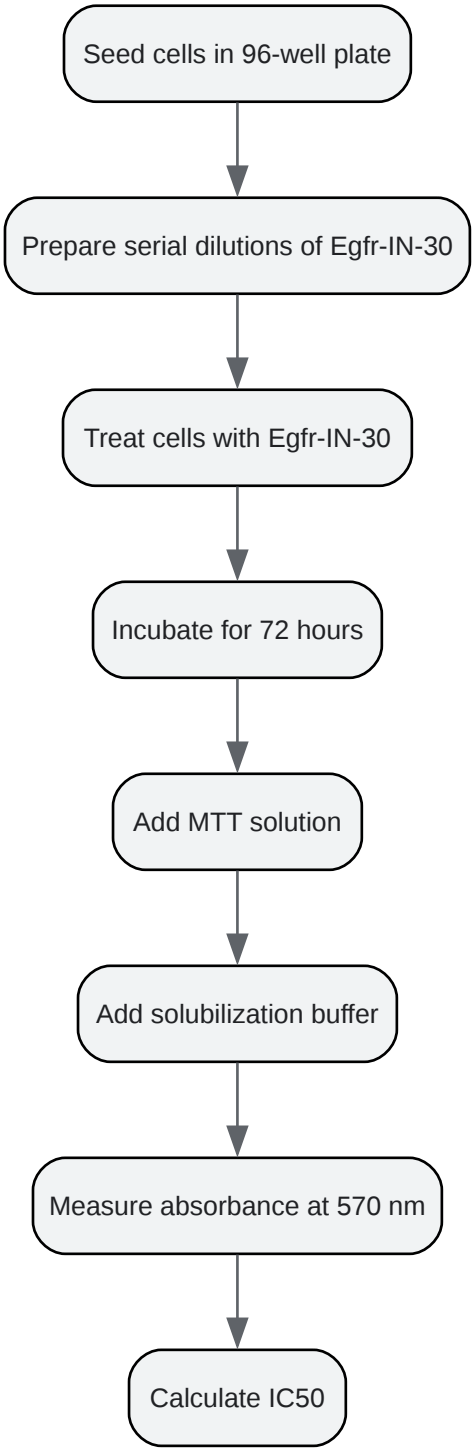

Click to download full resolution via product page

Caption: Workflow for the In Vitro Cell Viability Assay.

Western Blot Analysis of EGFR Phosphorylation

© 2026 BenchChem. All rights reserved.

This protocol is used to assess the inhibitory effect of **Egfr-IN-30** on EGFR phosphorylation.

Materials:

- Cancer cell lines
- Complete cell culture medium
- **Egfr-IN-30**
- EGF (ligand)
- Lysis buffer (e.g., RIPA buffer with protease and phosphatase inhibitors)
- BCA protein assay kit
- SDS-PAGE gels and running buffer
- Transfer buffer and nitrocellulose or PVDF membranes
- Blocking buffer (e.g., 5% non-fat milk or BSA in TBST)
- Primary antibodies (anti-phospho-EGFR, anti-total-EGFR, anti-GAPDH or β-actin)
- HRP-conjugated secondary antibodies
- ECL detection reagent
- Chemiluminescence imaging system

Procedure:

- Cell Culture and Treatment: Culture cells to 70-80% confluency. Serum-starve the cells overnight, then pre-treat with various concentrations of **Egfr-IN-30** for 2 hours. Stimulate the cells with EGF (e.g., 100 ng/mL) for 15 minutes.
- Cell Lysis: Wash cells with cold PBS and lyse with lysis buffer.
- Protein Quantification: Determine the protein concentration of the lysates using a BCA assay.

© 2026 BenchChem. All rights reserved.

- SDS-PAGE and Western Blotting: Separate equal amounts of protein on an SDS-PAGE gel and transfer to a membrane.
- Immunoblotting: Block the membrane with blocking buffer for 1 hour at room temperature. Incubate with primary antibodies overnight at 4°C. Wash the membrane and incubate with HRP-conjugated secondary antibodies for 1 hour at room temperature.
- Detection: Wash the membrane and add ECL detection reagent. Visualize the protein bands using a chemiluminescence imaging system.[6][7]

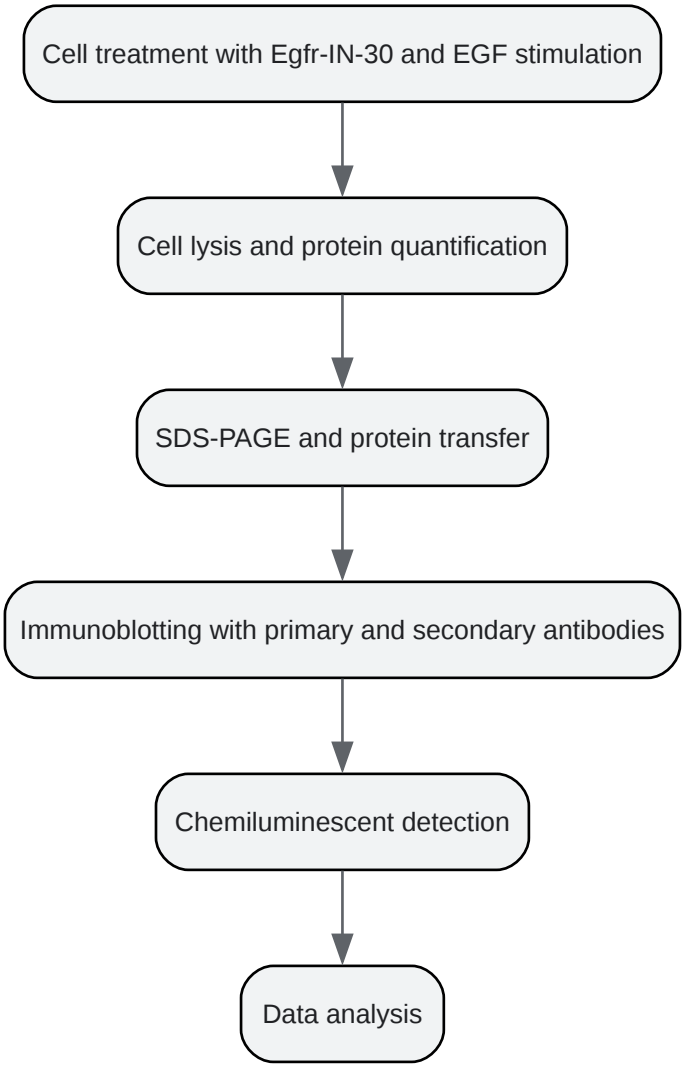

Click to download full resolution via product page

Caption: Workflow for Western Blot Analysis of EGFR Phosphorylation.

© 2026 BenchChem. All rights reserved.

In Vivo Xenograft Tumor Model

This protocol outlines a general procedure for evaluating the anti-tumor efficacy of **Egfr-IN-30** in a mouse xenograft model.

Materials:

- Immunocompromised mice (e.g., nude mice)
- Cancer cell line (e.g., H1975, expressing L858R/T790M EGFR)
- Matrigel
- **Egfr-IN-30**
- Vehicle solution for in vivo administration
- Calipers for tumor measurement

Procedure:

- Tumor Cell Implantation: Subcutaneously inject a suspension of tumor cells (e.g., 5 x 10^6 cells in 100 µL of PBS/Matrigel mixture) into the flank of each mouse.
- Tumor Growth and Grouping: Monitor tumor growth. When tumors reach an average volume of 100-150 mm^3, randomize the mice into treatment and control groups.
- Drug Administration: Administer **Egfr-IN-30** (e.g., via oral gavage or intraperitoneal injection) at a predetermined dose and schedule. The control group should receive the vehicle solution.
- Tumor Measurement: Measure tumor volume with calipers every 2-3 days. Tumor volume can be calculated using the formula: (Length x $Width^2$)/2.
- Monitoring: Monitor the body weight and general health of the mice throughout the study.
- Endpoint: At the end of the study (e.g., when tumors in the control group reach a certain size), euthanize the mice and excise the tumors for further analysis (e.g., Western blot,

© 2026 BenchChem. All rights reserved.

immunohistochemistry).[8][9]

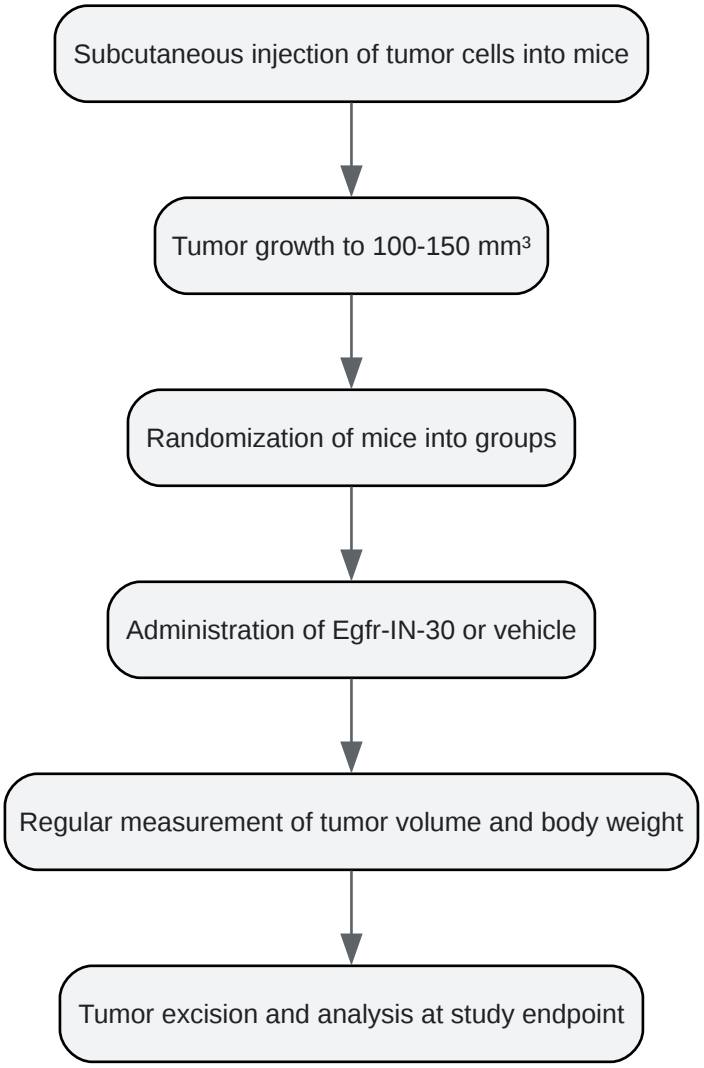

Click to download full resolution via product page

Caption: Workflow for an In Vivo Xenograft Tumor Model Study.

Solubility and Formulation

Solubility:

- DMSO: ≥ 100 mg/mL

Formulation for In Vivo Studies: A common formulation for in vivo administration of hydrophobic compounds involves a mixture of solvents. A suggested vehicle could be:

© 2026 BenchChem. All rights reserved.

- 5% DMSO
- 40% PEG300
- 5% Tween 80
- 50% saline

Preparation of a 1 mg/mL working solution:

- Dissolve 10 mg of **Egfr-IN-30** in 0.5 mL of DMSO to make a 20 mg/mL stock solution.
- Add 4 mL of PEG300 to the stock solution and mix well.
- Add 0.5 mL of Tween 80 and mix thoroughly.
- Add saline to a final volume of 10 mL and mix until a clear solution is formed.

Note: The optimal formulation may vary depending on the specific experimental conditions and route of administration. It is recommended to perform small-scale solubility and stability tests before preparing a large batch.

Disclaimer: This document is intended for research use only. **Egfr-IN-30** is not for human or veterinary use. All experiments should be conducted in accordance with institutional guidelines and safety protocols.

Need Custom Synthesis?

BenchChem offers custom synthesis for rare earth carbides and specific isotopiclabeling.

Email: info@benchchem.com or Request Quote Online.

References

- 1. EGFR inhibitors sensitize non–small cell lung cancer cells to TRAIL-induced apoptosis - PMC [pmc.ncbi.nlm.nih.gov]
- 2. Construction of a novel cell-based assay for the evaluation of anti-EGFR drug efficacy against EGFR mutation - PMC [pmc.ncbi.nlm.nih.gov]

- 3. researchgate.net [researchgate.net]
- 4. promega.com.cn [promega.com.cn]
- 5. Chronicles of EGFR Tyrosine Kinase Inhibitors: Targeting EGFR C797S Containing Triple Mutations - PMC [pmc.ncbi.nlm.nih.gov]
- 6. pubcompare.ai [pubcompare.ai]
- 7. Analyzing expression and phosphorylation of the EGF receptor in HNSCC - PMC [pmc.ncbi.nlm.nih.gov]
- 8. aacrjournals.org [aacrjournals.org]
- 9. oncotarget.com [oncotarget.com]

- To cite this document: BenchChem. [Application Notes and Protocols for Egfr-IN-30]. BenchChem, [2026]. [Online PDF]. Available at: [https://www.benchchem.com/product/b12418872/docs#application-notes-and-protocols-for-egfr-in-30]

Disclaimer & Data Validity:

The information provided in this document is for Research Use Only (RUO) and is strictly not intended for diagnostic or therapeutic procedures. While BenchChem strives to provide accurate protocols, we make no warranties, express or implied, regarding the fitness of this product for every specific experimental setup.

Technical Support: The protocols provided are for reference purposes. Unsure if this reagent suits your experiment?

Need Industrial/Bulk Grade? Request Custom Synthesis Quote

BenchChem

Our mission is to be the trusted global source of essential and advanced chemicals, empowering scientists and researchers to drive progress in science and industry.

Contact

Address: 3281 E Guasti Rd

Ontario, CA 91761, United States

Phone: (601) 213-4426

Email: info@benchchem.com

© 2026 BenchChem. All rights reserved.

Contact our Ph.D. Support Team for a compatibility check

© 2026 BenchChem. All rights reserved.