Interpreting unexpected results from SW-034538 experiments

Author: BenchChem Technical Support Team. **Date**: April 2026

Compound of Interest

Compound Name:	*SW-034538*
Cat. No.:	*B12415436*

Get Quote

Technical Support Center: SW-034538

This technical support center provides troubleshooting guidance and frequently asked questions (FAQs) for researchers and drug development professionals working with the novel MEK1/2 inhibitor, **SW-034538**. Our aim is to help you interpret unexpected results and provide standardized protocols for key experiments.

Frequently Asked Questions (FAQs)

Q1: What is the mechanism of action for **SW-034538**?

A1: **SW-034538** is a potent and selective, ATP-competitive inhibitor of MEK1 and MEK2 kinases. By inhibiting MEK, **SW-034538** blocks the phosphorylation and activation of ERK1/2, a key downstream component of the MAPK/ERK signaling pathway. This pathway is frequently hyperactivated in various cancers, making it a key therapeutic target.

Q2: In which cell lines is **SW-034538** expected to be most effective?

A2: **SW-034538** is expected to show the highest efficacy in cell lines with activating mutations in upstream components of the MAPK/ERK pathway, such as BRAF (e.g., V600E) or RAS

© 2026 BenchChem. All rights reserved.

(e.g., KRAS, NRAS). Examples include melanoma (A375), colorectal cancer (HT-29), and non-small cell lung cancer (A549) cell lines.

Q3: What are the recommended storage conditions for **SW-034538**?

A3: For long-term storage, **SW-034538** should be stored as a solid at -20°C. For short-term use, a stock solution in DMSO can be stored at -20°C or -80°C. Avoid repeated freeze-thaw cycles.

Troubleshooting Unexpected Results

Issue 1: Higher than Expected IC50 Value in a BRAF-Mutant Cell Line

You are performing a cell viability assay (e.g., MTT or CellTiter-Glo) in a BRAF V600E mutant cell line (e.g., A375) and observe a significantly higher IC50 value for **SW-034538** than anticipated based on preliminary data.

Potential Causes and Solutions:

- Compound Stability:
  - Question: Has the **SW-034538** solution been stored correctly and for how long?
  - Solution: Prepare a fresh stock solution of **SW-034538** in high-quality, anhydrous DMSO. Ensure the stock concentration is accurately determined.
- Cell Line Integrity:
  - Question: Has the cell line been recently authenticated? Could there be a case of misidentification or contamination?
  - Solution: Perform STR profiling to confirm the identity of your cell line. Check for mycoplasma contamination, as this can affect cellular responses to drugs.
- Assay Conditions:

© 2026 BenchChem. All rights reserved.

- Question: Was the cell seeding density appropriate? Is the incubation time with the compound optimal?
- Solution: Optimize the cell seeding density to ensure cells are in the exponential growth phase during the experiment. Perform a time-course experiment (e.g., 24, 48, 72 hours) to determine the optimal endpoint.

- Development of Resistance:
  - Question: Have the cells been cultured for an extended period, potentially leading to the selection of a resistant population?
  - Solution: Use early passage cells for your experiments. If resistance is suspected, perform a Western blot to confirm that **SW-034538** is still inhibiting ERK phosphorylation at the expected concentrations.

Issue 2: Paradoxical Activation of ERK Signaling at Low Concentrations

In a Western blot analysis, you observe that at low concentrations, **SW-034538** appears to increase the levels of phosphorylated ERK (p-ERK), while higher concentrations show the expected inhibition.

Potential Causes and Solutions:

- Feedback Mechanisms:
  - Question: Is the cell line known to have feedback loops that regulate the MAPK pathway?
  - Solution: This paradoxical activation can be a known phenomenon with MEK inhibitors in certain contexts. Inhibition of the pathway can sometimes relieve negative feedback loops, leading to a temporary surge in signaling. Analyze earlier time points (e.g., 1, 2, 4 hours) to see if this is a transient effect.

- Off-Target Effects:
  - Question: Could **SW-034538** have off-target effects at specific concentrations?

© 2026 BenchChem. All rights reserved.

- Solution: While designed to be selective, no inhibitor is perfectly specific. Consider performing a kinome scan to identify potential off-target activities. However, a more immediate step is to compare the effects with another known MEK inhibitor.

- Experimental Artifact:
  - Question: Are you confident in the accuracy of your serial dilutions?
  - Solution: Carefully re-prepare your drug dilutions. Use a positive control (e.g., another well-characterized MEK inhibitor) and a vehicle control in your Western blot.

Data Presentation

Table 1: Expected vs. Unexpected IC50 Values for **SW-034538** in A375 Melanoma Cells (72h Incubation)

Parameter	Expected Value	Unexpected Value	Potential Implication
IC50	10 - 50 nM	> 500 nM	Compound degradation, cell line issue, or resistance.

Table 2: Interpreting Western Blot Results for p-ERK/Total ERK

SW-034538 Conc.	Expected p-ERK Level	Unexpected p-ERK Level	Potential Interpretation
0 nM (Vehicle)	High (Baseline)	High (Baseline)	N/A
1 - 10 nM	Dose-dependent decrease	Increase followed by decrease	Paradoxical activation due to feedback loops.
100 nM	Strong Inhibition	No change from baseline	Inactive compound or resistant cells.
1000 nM	Complete Inhibition	No change from baseline	Inactive compound or resistant cells.

© 2026 BenchChem. All rights reserved.

Experimental Protocols

Protocol 1: Western Blot for p-ERK Inhibition

- Cell Seeding: Seed 1 x 10^6 A375 cells in 6-well plates and allow them to adhere overnight.
- Compound Treatment: Treat cells with a serial dilution of **SW-034538** (e.g., 0, 1, 10, 100, 1000 nM) in complete medium for 24 hours.
- Cell Lysis: Wash cells with ice-cold PBS and lyse with RIPA buffer containing protease and phosphatase inhibitors.
- Protein Quantification: Determine protein concentration using a BCA assay.
- SDS-PAGE and Transfer: Load 20 µg of protein per lane on a 10% SDS-PAGE gel. Transfer proteins to a PVDF membrane.
- Blocking and Antibody Incubation: Block the membrane with 5% BSA in TBST for 1 hour. Incubate with primary antibodies against p-ERK1/2 (e.g., 1:1000) and total ERK1/2 (e.g., 1:1000) overnight at 4°C.
- Secondary Antibody and Detection: Wash the membrane and incubate with an HRP-conjugated secondary antibody (e.g., 1:5000) for 1 hour at room temperature. Detect with an ECL substrate.
- Loading Control: Re-probe the membrane for a loading control like GAPDH or β-actin.

Protocol 2: Cell Viability (MTT) Assay

- Cell Seeding: Seed 5,000 A375 cells per well in a 96-well plate and allow them to adhere overnight.
- Compound Treatment: Add serial dilutions of **SW-034538** to the wells in triplicate. Include a vehicle-only control.
- Incubation: Incubate the plate for 72 hours at 37°C in a CO2 incubator.
- MTT Addition: Add 10 µL of 5 mg/mL MTT solution to each well and incubate for 4 hours.

© 2026 BenchChem. All rights reserved.

- Solubilization: Remove the medium and add 100 µL of DMSO to each well to dissolve the formazan crystals.
- Absorbance Reading: Read the absorbance at 570 nm using a plate reader.
- Data Analysis: Calculate the percentage of viable cells relative to the vehicle control and determine the IC50 value using non-linear regression analysis.

Visualizations

© 2026 BenchChem. All rights reserved.

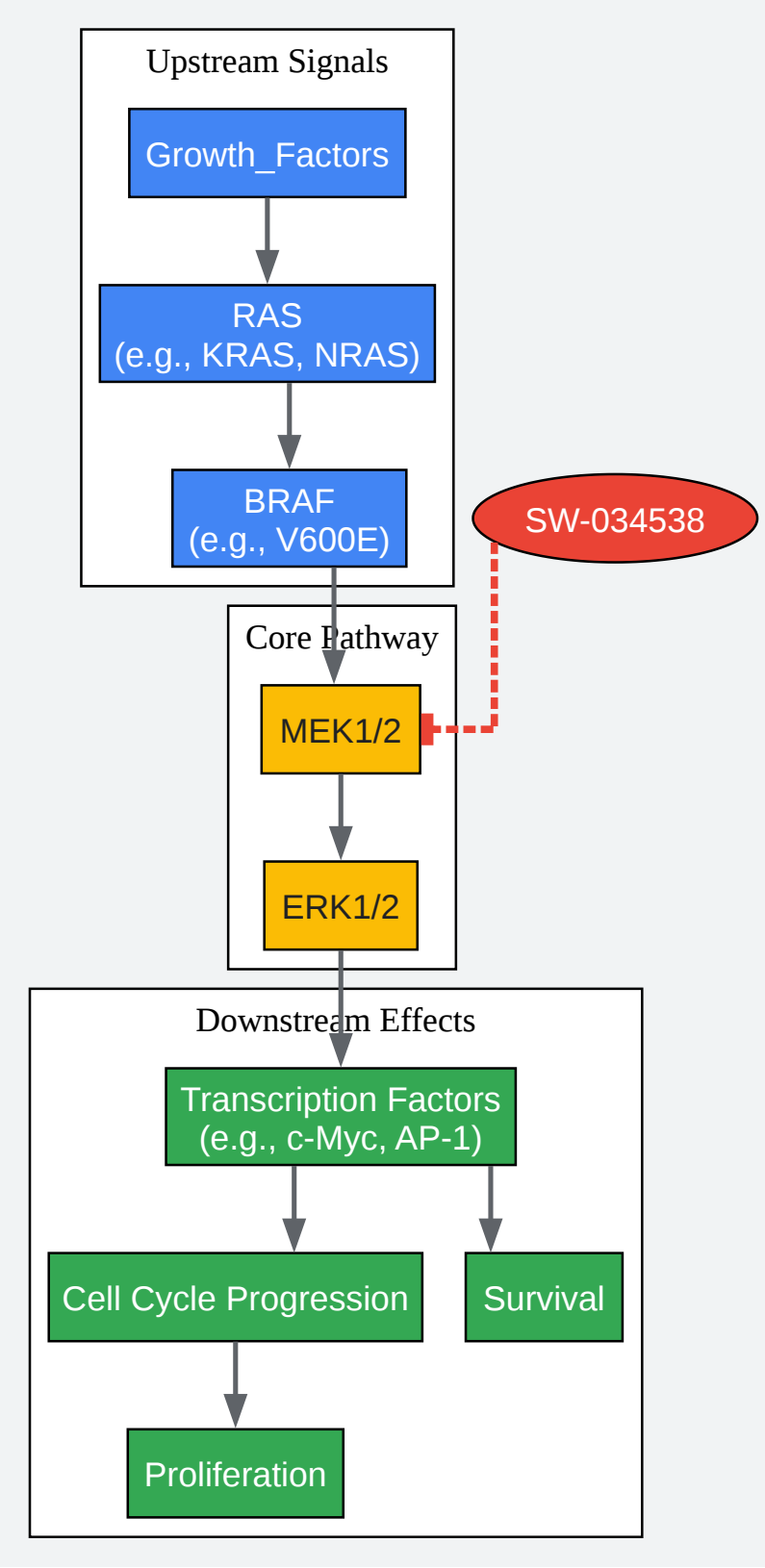

Click to download full resolution via product page

© 2026 BenchChem. All rights reserved.

Caption: The MAPK/ERK signaling pathway and the inhibitory action of **SW-034538** on MEK1/2.

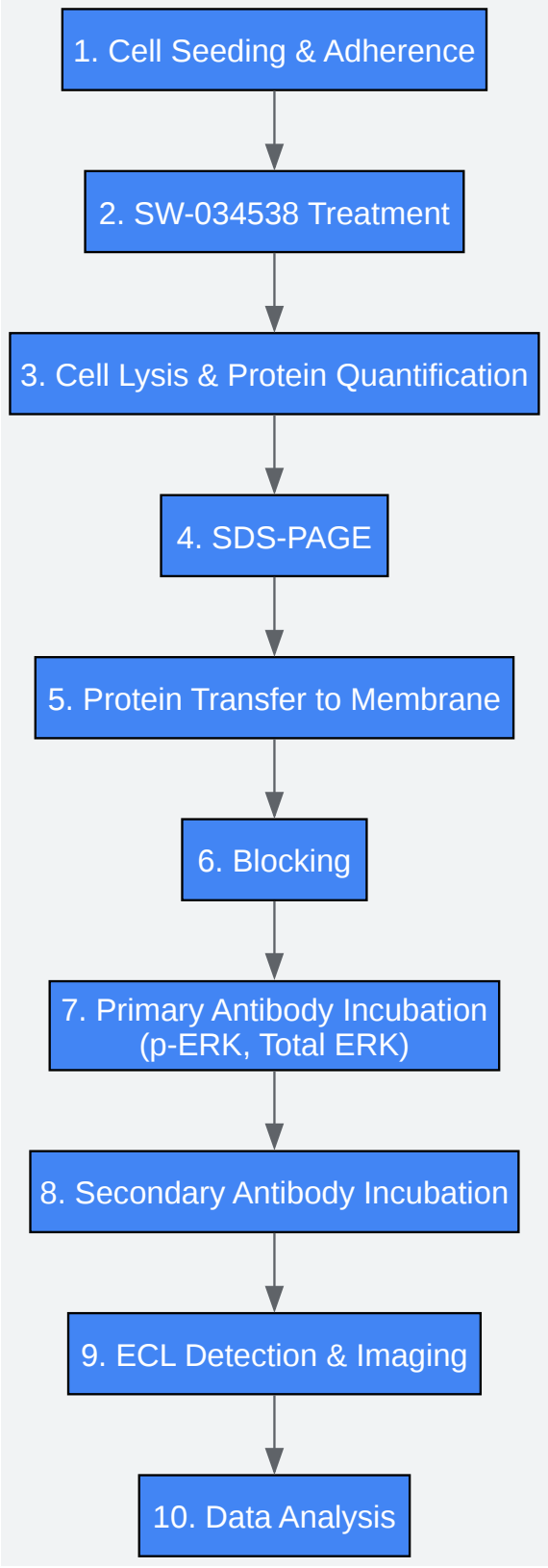

© 2026 BenchChem. All rights reserved.

Click to download full resolution via product page

Caption: Experimental workflow for Western Blot analysis of p-ERK inhibition.

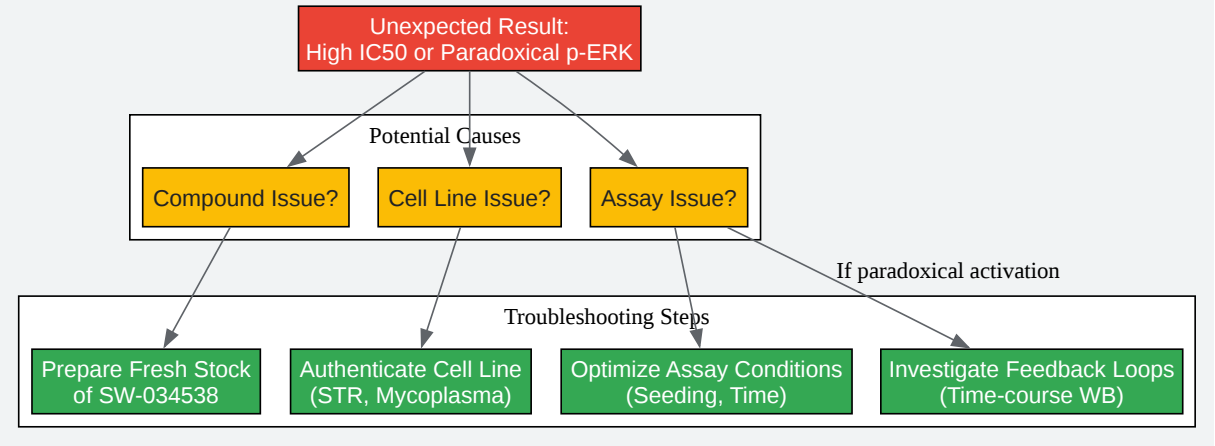

Click to download full resolution via product page

Caption: A troubleshooting decision tree for unexpected results with **SW-034538**.

- To cite this document: BenchChem. [Interpreting unexpected results from SW-034538 experiments]. BenchChem, [2026]. [Online PDF]. Available at: [https://www.benchchem.com/product/b12415436/docs#interpreting-unexpected-results-from-sw-034538-experiments]

Disclaimer & Data Validity:

The information provided in this document is for Research Use Only (RUO) and is strictly not intended for diagnostic or therapeutic procedures. While BenchChem strives to provide accurate protocols, we make no warranties, express or implied, regarding the fitness of this product for every specific experimental setup.

© 2026 BenchChem. All rights reserved.

Technical Support: The protocols provided are for reference purposes. Unsure if this reagent suits your experiment?

Need Industrial/Bulk Grade? Request Custom Synthesis Quote

BenchChem

Our mission is to be the trusted global source of essential and advanced chemicals, empowering scientists and researchers to drive progress in science and industry.

Contact

Address: 3281 E Guasti Rd

Ontario, CA 91761, United States

Phone: (601) 213-4426

Email: info@benchchem.com

Contact our Ph.D. Support Team for a compatibility check

© 2026 BenchChem. All rights reserved.