Troubleshooting inconsistent results with TrxR-IN-2

Author: BenchChem Technical Support Team. **Date**: April 2026

Compound of Interest

Compound Name:	*TrxR-IN-2*
Cat. No.:	*B12413701*

Get Quote

Technical Support Center: TrxR-IN-2

Welcome to the technical support center for **TrxR-IN-2**. This resource is designed for researchers, scientists, and drug development professionals to address common issues and ensure consistency in experimental results.

Frequently Asked Questions (FAQs) & Troubleshooting

This section addresses specific issues that may arise during the use of **TrxR-IN-2**, a potential inhibitor of thioredoxin reductase (TrxR) investigated for its effects on drug-resistant hepatocellular carcinoma.

Q1: Why are my IC50 values for **TrxR-IN-2** inconsistent with published data or fluctuating between experiments?

A1: Inconsistent IC50 values can stem from several factors related to compound handling, assay conditions, and cell health.

© 2026 BenchChem. All rights reserved.

- Compound Solubility and Stability: **TrxR-IN-2** is a derivative of piperlongumine and ligustrazine. Like many organic small molecules, it may have limited aqueous solubility. Ensure the compound is fully dissolved in a suitable solvent (e.g., DMSO) before preparing final dilutions in aqueous media. Precipitates, even if not visible, can drastically lower the effective concentration. It is recommended to prepare fresh dilutions for each experiment from a frozen stock solution, as the stability of **TrxR-IN-2** in aqueous media over extended periods may be limited.

- Cell Health and Density: The metabolic state and density of your cells can significantly impact their sensitivity to inhibitors. Ensure cells are healthy, in the logarithmic growth phase, and plated at a consistent density for every experiment. Over-confluent or stressed cells may exhibit altered redox states, affecting their response to a TrxR inhibitor.

- Assay-Specific Variability: The protein concentration in cell lysates can affect enzyme kinetics. It is crucial to perform a protein quantification assay (e.g., Bradford assay) and normalize the lysate volume used to ensure equal protein amounts in each reaction. Additionally, ensure that the concentration of NADPH and the substrate (DTNB) are not limiting.

Q2: I'm observing high background signal in my TrxR activity assay. What is the cause?

A2: High background is a common issue in TrxR assays using the DTNB reduction method. This is because other cellular enzymes, particularly glutathione reductase (GR), can also reduce DTNB.

To isolate TrxR-specific activity, it is essential to run a parallel control reaction for each sample. This control should contain a specific inhibitor of TrxR (e.g., aurothiomalate, or the inhibitor provided in commercial kits). The true TrxR activity is the difference between the total activity (no inhibitor) and the background activity (with inhibitor).[1][2][3]

Q3: **TrxR-IN-2** appears to lose activity over time in my aqueous assay buffer. How should I handle the compound?

A3: Many inhibitors are susceptible to degradation in aqueous solutions.

- Stock Solutions: Prepare a high-concentration stock solution of **TrxR-IN-2** in an anhydrous solvent like DMSO. Aliquot and store at -20°C or -80°C to minimize freeze-thaw cycles.

© 2026 BenchChem. All rights reserved.

- Working Dilutions: On the day of the experiment, thaw a stock aliquot and prepare fresh serial dilutions in your assay buffer immediately before adding them to your cells or lysates. Avoid storing diluted aqueous solutions of the compound.

Q4: My results show unexpected cellular effects. Could there be off-target activity?

A4: While **TrxR-IN-2** is investigated as a TrxR inhibitor, like most small molecules, it may have off-target effects. Inhibition of TrxR disrupts the cell's primary antioxidant system, leading to a buildup of reactive oxygen species (ROS).[4] This can trigger a cascade of downstream events, including activation of stress-related pathways (like MAPK) and induction of apoptosis, which may complicate the interpretation of results.[4] It is advisable to include multiple downstream markers (e.g., ROS levels, apoptosis markers) to build a comprehensive picture of the compound's cellular impact.

Quantitative Data

The inhibitory activity of TrxR inhibitors is often compared across different cell lines or against different TrxR isoforms. While specific data for **TrxR-IN-2** is limited in publicly available datasheets, the following table provides an example based on published data for similar compounds to illustrate how such data can be presented.

Compound	Target	Cell Line	IC50 Value (μM)
Auranofin	TrxR1	B16-F10	3.0
TRi-1	TrxR1	B16-F10	20.0
TRi-2	TrxR1	B16-F10	3.0
Nitrovin	TrxR1	Various	1.31 - 6.60
TrxR-IN-7	TrxR	Recombinant	3.5

Table based on data from representative studies for comparison purposes.

Signaling Pathway

Inhibition of Thioredoxin Reductase (TrxR) by **TrxR-IN-2** disrupts the cellular redox balance. Normally, TrxR uses electrons from NADPH to reduce thioredoxin (Trx). Reduced Trx then

© 2026 BenchChem. All rights reserved.

reduces oxidized proteins, including peroxiredoxins (Prx) which detoxify reactive oxygen species (ROS). Trx also inhibits Apoptosis Signal-regulating Kinase 1 (ASK1). When TrxR is inhibited, oxidized Trx accumulates, ROS levels rise, and the inhibition on ASK1 is released, leading to downstream activation of apoptotic pathways.

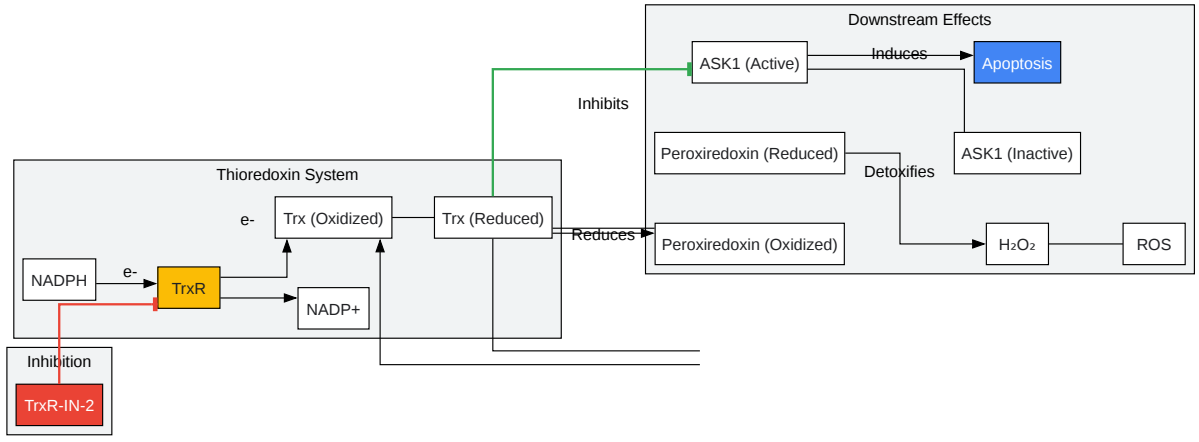

Click to download full resolution via product page

Figure 1. Mechanism of **TrxR-IN-2** action on the thioredoxin signaling pathway.

Experimental Protocols

Protocol: Measuring TrxR Activity in Cell Lysates

This protocol is based on the widely used DTNB reduction assay, adapted from various commercial kits.

© 2026 BenchChem. All rights reserved.

1. Materials:

- Assay Buffer: 50 mM Potassium Phosphate, pH 7.0, containing 1 mM EDTA.
- Cell Lysis Buffer: Assay buffer supplemented with a protease inhibitor cocktail.
- NADPH Solution: Prepare a 4 mg/mL stock in Assay Buffer. Store on ice.
- DTNB Solution: Prepare a 10 mM stock in Assay Buffer.
- TrxR Inhibitor (Control): Aurothiomalate (100 µM) or another specific TrxR inhibitor.
- 96-well clear, flat-bottom plate.
- Spectrophotometric plate reader capable of reading at 412 nm.

2. Sample Preparation:

- Culture cells to the desired confluency.
- Harvest cells (e.g., for 2 x 10^6 cells) and wash with ice-cold PBS.
- Centrifuge, discard the supernatant, and resuspend the cell pellet in 100-200 µL of cold Lysis Buffer.
- Homogenize the sample by sonication on ice or by repeated freeze-thaw cycles.
- Centrifuge the lysate at 10,000 x g for 15 minutes at 4°C to pellet cell debris.
- Collect the supernatant (cytosolic fraction) and keep it on ice.
- Determine the protein concentration of the supernatant using a Bradford assay.

3. Assay Procedure:

- For each sample, prepare two sets of wells: "Total Activity" and "Background Control".
- Add 2-50 µL of cell lysate to each well. Adjust the final volume to 50 µL with Assay Buffer. The amount of lysate should be optimized for your specific cell type.

© 2026 BenchChem. All rights reserved.

- To the "Background Control" wells, add 10 µL of the TrxR inhibitor solution.
- To the "Total Activity" wells, add 10 µL of Assay Buffer.
- Prepare a Reaction Mix for all wells by combining:
  - 80 µL Assay Buffer
  - 10 µL DTNB Solution
  - 10 µL NADPH Solution
- Initiate the reaction by adding 100 µL of the Reaction Mix to each well.
- Immediately measure the absorbance at 412 nm in kinetic mode, recording every minute for at least 10 minutes.

4. Data Analysis:

- Calculate the rate of reaction (ΔAbs/min) from the linear portion of the kinetic curve for both "Total Activity" and "Background Control" samples.
- Subtract the rate of the "Background Control" from the "Total Activity" to get the TrxR-specific activity.
  - TrxR Activity (ΔAbs/min) = Rate(Total) - Rate(Background)
- This rate can be converted to nmol/min/mg of protein using a TNB standard curve and the protein concentration of your sample.

Experimental Workflow Diagram

The following diagram outlines the typical workflow for assessing the inhibitory effect of **TrxR-IN-2** on cellular TrxR activity.

© 2026 BenchChem. All rights reserved.

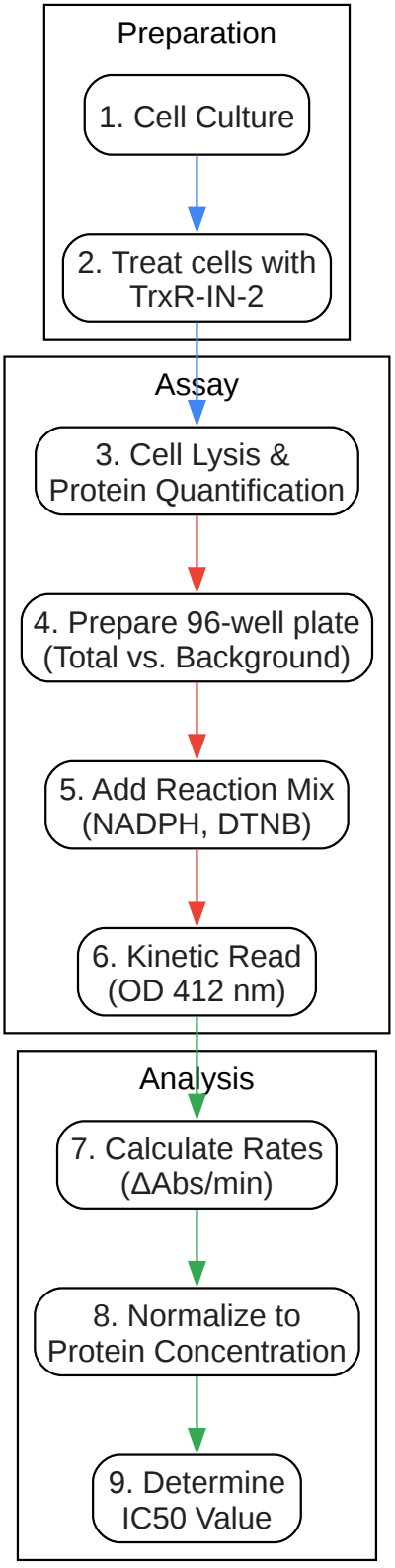

Click to download full resolution via product page

Figure 2. Standard experimental workflow for evaluating **TrxR-IN-2** activity.

© 2026 BenchChem. All rights reserved.

Troubleshooting Logic Diagram

This flowchart provides a logical sequence of steps to diagnose inconsistent experimental results.

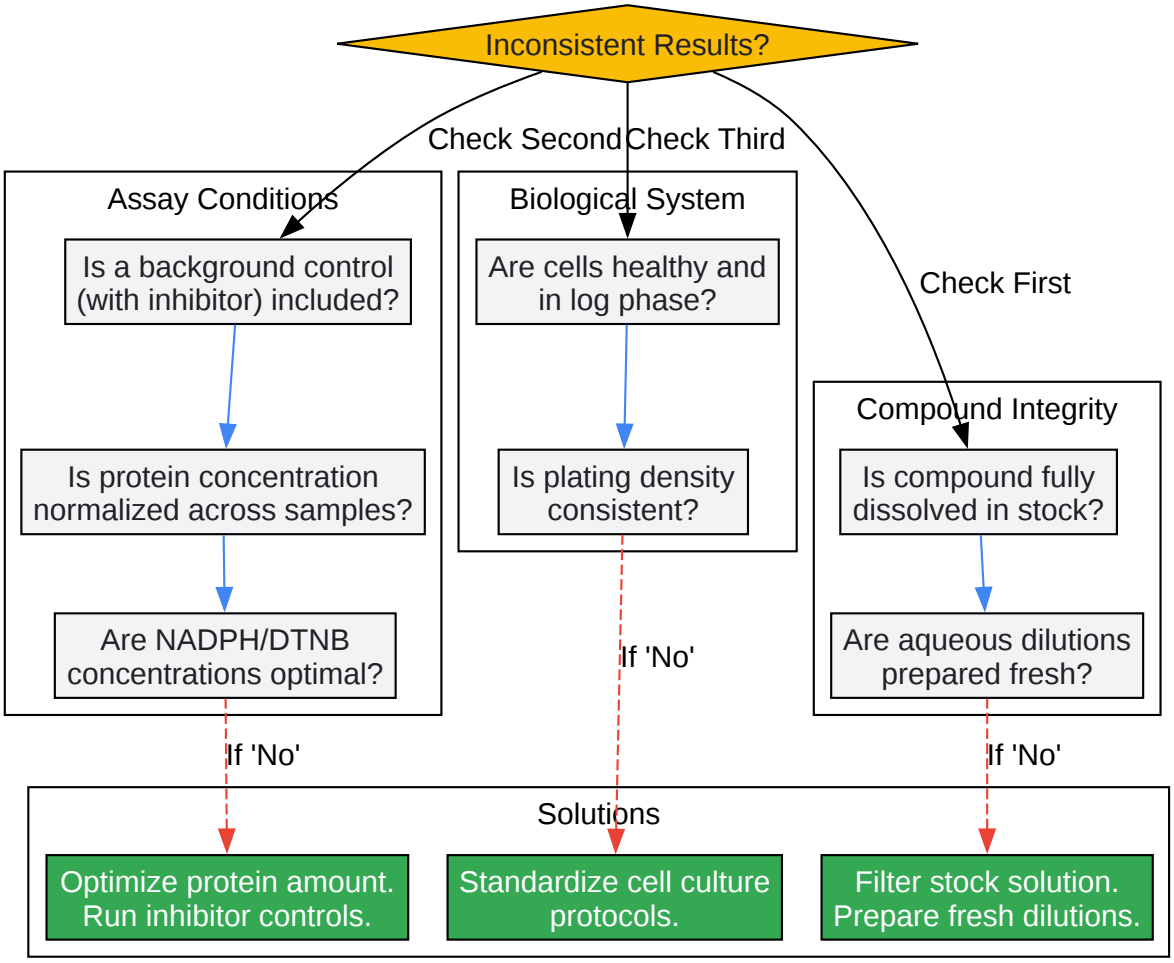

Click to download full resolution via product page

Figure 3. A logical flowchart for troubleshooting inconsistent results.

© 2026 BenchChem. All rights reserved.

Need Custom Synthesis?

BenchChem offers custom synthesis for rare earth carbides and specific isotopiclabeling.

Email: info@benchchem.com or Request Quote Online.

References

- 1. medchemexpress.com [medchemexpress.com]
- 2. medchemexpress.com [medchemexpress.com]
- 3. medchemexpress.com [medchemexpress.com]
- 4. Inhibiting TrxR suppresses liver cancer by inducing apoptosis and eliciting potent antitumor immunity - PMC [pmc.ncbi.nlm.nih.gov]
- To cite this document: BenchChem. [Troubleshooting inconsistent results with TrxR-IN-2]. BenchChem, [2026]. [Online PDF]. Available at: [https://www.benchchem.com/product/b12413701/docs#troubleshooting-inconsistent-results-with-trxr-in-2]

Disclaimer & Data Validity:

The information provided in this document is for Research Use Only (RUO) and is strictly not intended for diagnostic or therapeutic procedures. While BenchChem strives to provide accurate protocols, we make no warranties, express or implied, regarding the fitness of this product for every specific experimental setup.

Technical Support: The protocols provided are for reference purposes. Unsure if this reagent suits your experiment?

Need Industrial/Bulk Grade? Request Custom Synthesis Quote

© 2026 BenchChem. All rights reserved.

BenchChem

Our mission is to be the trusted global source of essential and advanced chemicals, empowering scientists and researchers to drive progress in science and industry.

Contact

Address: 3281 E Guasti Rd

Ontario, CA 91761, United States

Phone: (601) 213-4426

Email: info@benchchem.com

Contact our Ph.D. Support Team for a compatibility check

© 2026 BenchChem. All rights reserved.