Egfr-IN-32 degradation during long-term experiments

Author: BenchChem Technical Support Team. **Date**: April 2026

Compound of Interest

Compound Name:	*Egfr-IN-32*
Cat. No.:	*B12413694*

Get Quote

Technical Support Center: EGFR-IN-32

This technical support center provides troubleshooting guides and frequently asked questions (FAQs) for researchers, scientists, and drug development professionals working with **EGFR-IN-32**. The information is presented in a question-and-answer format to directly address potential issues encountered during long-term experiments.

Frequently Asked Questions (FAQs)

Q1: What is the expected stability of **EGFR-IN-32** in aqueous solutions and cell culture media?

A1: The stability of small molecule inhibitors like **EGFR-IN-32** can be influenced by factors such as pH, temperature, and the presence of serum proteins.[1][2] It is recommended to prepare fresh solutions for each experiment. For long-term storage, aliquoting the stock solution in an appropriate solvent (e.g., DMSO) and storing at -80°C is advisable. Preliminary stability studies in your specific cell culture medium are recommended to determine the compound's half-life under your experimental conditions.[1]

Q2: How often should the cell culture medium containing **EGFR-IN-32** be replaced in long-term experiments?

© 2026 BenchChem. All rights reserved.

A2: The frequency of media changes depends on the stability of **EGFR-IN-32** and the metabolic activity of the cells. If the compound degrades significantly over 24-48 hours, more frequent media changes may be necessary to maintain a consistent effective concentration. A stability assessment of **EGFR-IN-32** in your specific cell culture setup is crucial to determine the optimal media replacement schedule.

Q3: What are the potential reasons for a decrease in the inhibitory effect of **EGFR-IN-32** over time?

A3: A decline in the inhibitory effect of **EGFR-IN-32** during long-term experiments can be attributed to several factors:

- Compound Degradation: **EGFR-IN-32** may be chemically unstable in the culture medium, leading to a lower effective concentration over time.
- Cellular Metabolism: Cells may metabolize the compound, converting it into less active or inactive forms.
- Development of Resistance: Cancer cells can develop resistance to EGFR inhibitors through various mechanisms, such as secondary mutations in the EGFR gene (e.g., T790M) or activation of bypass signaling pathways.[3]
- Autophagy: Autophagy can be a cellular response to stress induced by inhibitors, potentially leading to cell survival and reduced drug efficacy.[4]

Q4: How can I assess the degradation of **EGFR-IN-32** in my experiments?

A4: The degradation of **EGFR-IN-32** can be monitored using analytical techniques such as High-Performance Liquid Chromatography (HPLC) or Liquid Chromatography-Mass Spectrometry (LC-MS).[1][5] These methods can quantify the concentration of the intact compound in the cell culture medium at different time points.

Troubleshooting Guide

© 2026 BenchChem. All rights reserved.

Problem	Possible Causes	Recommended Solutions
Loss of EGFR-IN-32 activity in a long-term experiment.	1. Compound degradation: The inhibitor is not stable under the experimental conditions. 2. Cellular metabolism: The cells are inactivating the inhibitor. 3. Development of drug resistance: The cancer cells have acquired mechanisms to overcome the inhibitor's effects.[3]	1. Assess compound stability: Perform an HPLC or LC-MS analysis of the culture medium over time to determine the half-life of EGFR-IN-32.[1][5] Increase the frequency of media changes if significant degradation is observed. 2. Investigate metabolism: Analyze cell lysates and culture medium for metabolites of EGFR-IN-32 using LC-MS. 3. Test for resistance: Sequence the EGFR gene in the treated cells to check for resistance mutations. Analyze the activation status of alternative signaling pathways (e.g., MET, HER2) using western blotting or other relevant assays.
High variability in experimental results.	1. Inconsistent compound concentration: The inhibitor is not being fully dissolved or is precipitating out of solution. 2. Inconsistent cell seeding density. 3. Plate edge effects.	1. Ensure complete solubilization: Confirm that EGFR-IN-32 is fully dissolved in the stock solution and is not precipitating upon dilution in the culture medium. Visually inspect the media for any precipitates. 2. Standardize cell seeding: Use a consistent cell seeding protocol to ensure uniform cell numbers across all wells and experiments. 3. Minimize edge effects: Avoid using the outer wells of the

© 2026 BenchChem. All rights reserved.

		microplate, or fill them with sterile PBS or media to maintain humidity.[6]
Unexpected off-target effects or cellular toxicity.	1. High inhibitor concentration: The concentration of EGFR-IN-32 being used is too high, leading to non-specific effects.[2] 2. Solvent toxicity: The concentration of the solvent (e.g., DMSO) is too high.	1. Perform a dose-response curve: Determine the IC50 value of EGFR-IN-32 in your cell line and use a concentration range around this value for your experiments.[2] 2. Maintain low solvent concentration: Ensure the final concentration of the solvent in the culture medium is below a non-toxic level (typically <0.5% for DMSO). Run a vehicle control (media with solvent only) to assess any solvent-induced toxicity.

Experimental Protocols

Protocol 1: Assessment of **EGFR-IN-32** Stability in Cell Culture Medium

Objective: To determine the stability and half-life of **EGFR-IN-32** in a specific cell culture medium over time.

Methodology:

- Prepare a stock solution of **EGFR-IN-32** in a suitable solvent (e.g., DMSO).
- Spike the cell culture medium (with and without serum) with **EGFR-IN-32** to the desired final concentration.
- Incubate the medium under standard cell culture conditions (37°C, 5% CO2).

© 2026 BenchChem. All rights reserved.

- Collect aliquots of the medium at various time points (e.g., 0, 2, 4, 8, 24, 48, and 72 hours).[1]
- Immediately store the collected samples at -80°C until analysis.
- Analyze the concentration of intact **EGFR-IN-32** in each sample using a validated HPLC or LC-MS method.[1][5]
- Plot the concentration of **EGFR-IN-32** versus time and calculate the half-life of the compound.

Protocol 2: Analysis of Cellular Uptake and Metabolism of EGFR-IN-32

Objective: To determine the intracellular concentration of **EGFR-IN-32** and identify potential metabolites.

Methodology:

- Seed cells in a multi-well plate and allow them to adhere overnight.
- Treat the cells with **EGFR-IN-32** at the desired concentration for various time points.
- At each time point, wash the cells with ice-cold PBS to remove any extracellular compound.
- Lyse the cells using a suitable lysis buffer.
- Extract the compound and any potential metabolites from the cell lysate using an appropriate organic solvent.[1]
- Analyze the extracts by LC-MS to quantify the intracellular concentration of **EGFR-IN-32** and identify any metabolites.

Visualizations

EGFR Signaling Pathway

© 2026 BenchChem. All rights reserved.

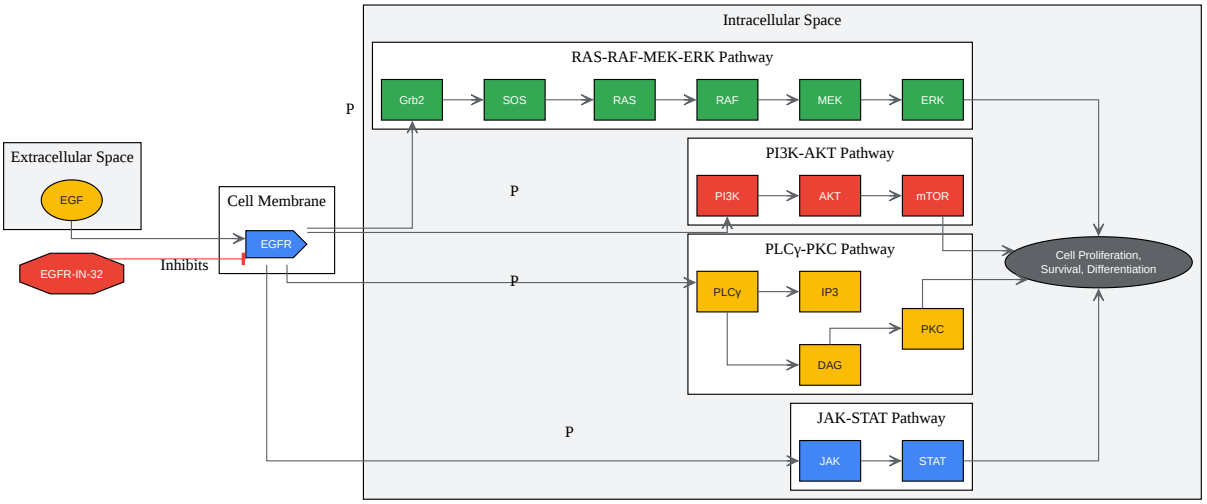

Click to download full resolution via product page

Caption: EGFR signaling pathways and the inhibitory action of **EGFR-IN-32**.

Experimental Workflow for Stability Assessment

© 2026 BenchChem. All rights reserved.

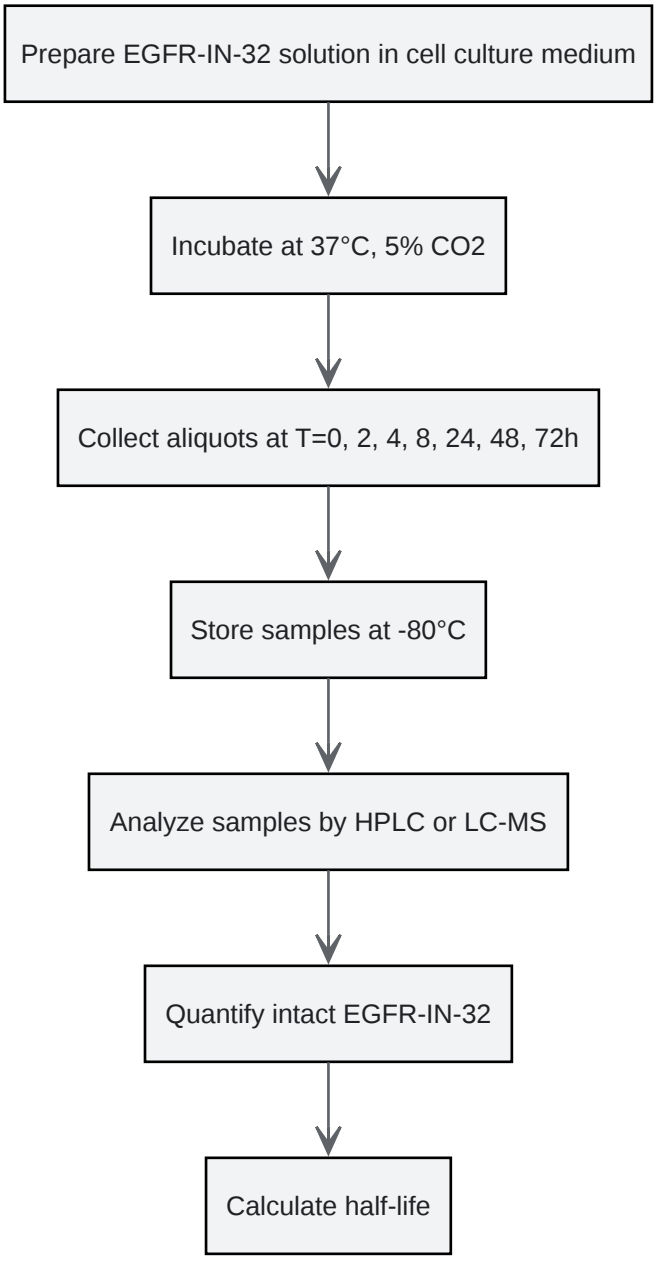

Click to download full resolution via product page

Caption: Workflow for assessing the stability of **EGFR-IN-32** in cell culture medium.

Troubleshooting Logic for Loss of Activity

© 2026 BenchChem. All rights reserved.

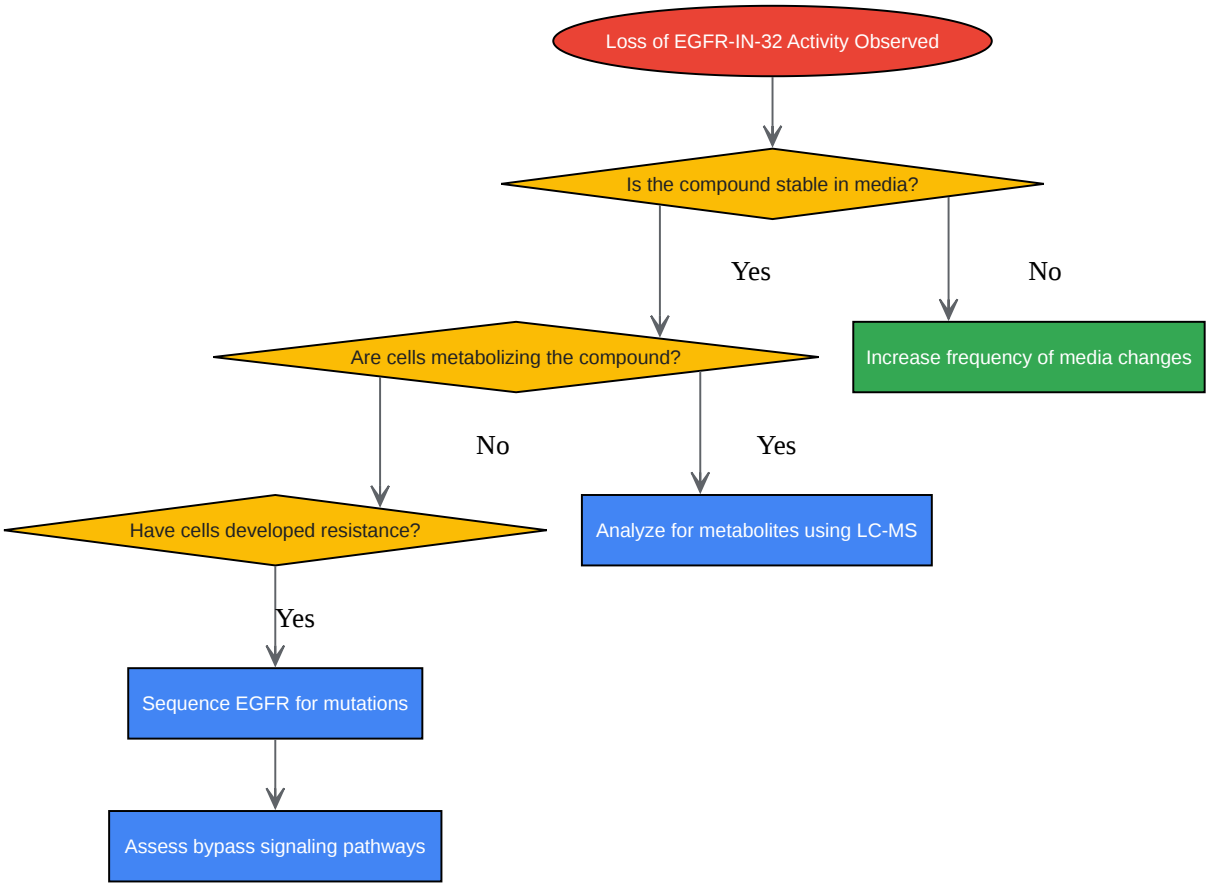

Click to download full resolution via product page

Caption: Troubleshooting decision tree for loss of **EGFR-IN-32** activity.

Need Custom Synthesis?

BenchChem offers custom synthesis for rare earth carbides and specific isotopiclabeling.

Email: info@benchchem.com or Request Quote Online.

References

© 2026 BenchChem. All rights reserved.

- 1. pubs.acs.org [pubs.acs.org]
- 2. caymanchem.com [caymanchem.com]
- 3. dovepress.com [dovepress.com]
- 4. Autophagy - Wikipedia [en.wikipedia.org]
- 5. Chemical Stability Assays - Creative Bioarray | Creative Bioarray [creative-bioarray.com]
- 6. A troubleshooting guide to microplate-based assays - Understand the impact microplate features and microplate reader settings have on your results [bionity.com]

- To cite this document: BenchChem. [Egfr-IN-32 degradation during long-term experiments]. BenchChem, [2026]. [Online PDF]. Available at: [https://www.benchchem.com/product/b12413694/docs#egfr-in-32-degradation-during-long-term-experiments]

Disclaimer & Data Validity:

The information provided in this document is for Research Use Only (RUO) and is strictly not intended for diagnostic or therapeutic procedures. While BenchChem strives to provide accurate protocols, we make no warranties, express or implied, regarding the fitness of this product for every specific experimental setup.

Technical Support: The protocols provided are for reference purposes. Unsure if this reagent suits your experiment?

Need Industrial/Bulk Grade? Request Custom Synthesis Quote

BenchChem

Our mission is to be the trusted global source of essential and advanced chemicals, empowering scientists and researchers to drive progress in science and industry.

Contact

Address: 3281 E Guasti Rd

Ontario, CA 91761, United States

Phone: (601) 213-4426

Email: info@benchchem.com

Contact our Ph.D. Support Team for a compatibility check

© 2026 BenchChem. All rights reserved.