Technical Guide: Analysis of Paliperidone and its Related Compounds

Author: BenchChem Technical Support Team. **Date**: April 2026

Compound of Interest

Compound Name:	*2,4-Difluorobenzoyl paliperidone-d4*
Cat. No.:	*B12411409*

Get Quote

For Researchers, Scientists, and Drug Development Professionals

This technical guide provides an in-depth overview of the analytical considerations for paliperidone, with a focus on its deuterated internal standard, paliperidone-d4, and a key related substance, 2,4-Difluorobenzoyl paliperidone. This document is intended for professionals in pharmaceutical research and development and quality control.

Introduction to Paliperidone

Paliperidone, the primary active metabolite of risperidone, is an atypical antipsychotic agent used for the treatment of schizophrenia and schizoaffective disorder.[1][2][3] Its therapeutic effects are believed to be mediated through a combination of central dopamine type 2 (D2) and serotonin type 2A (5-HT2A) receptor antagonism.[1][4][5][6] Paliperidone also exhibits antagonist activity at α1 and α2 adrenergic receptors and H1 histaminergic receptors, which may contribute to some of its side effects.[1][2][4][5][6]

Key Compounds in Paliperidone Analysis

© 2026 BenchChem. All rights reserved.

In the development and quality control of paliperidone, it is crucial to utilize appropriate internal standards for quantitative analysis and to monitor for any related substances or impurities.

2.1. Paliperidone-d4: The Internal Standard

Paliperidone-d4 is a deuterated form of paliperidone, commonly used as an internal standard in bioanalytical and pharmaceutical assays.[7][8] The substitution of hydrogen with deuterium atoms results in a molecule with a higher mass, allowing for its differentiation from the non-deuterated analyte in mass spectrometry, without significantly altering its chemical properties.[7]

2.2. 2,4-Difluorobenzoyl Paliperidone: A Related Substance

2,4-Difluorobenzoyl paliperidone is recognized as a related substance or impurity of paliperidone.[9] Monitoring and controlling such impurities is a critical aspect of ensuring the quality and safety of the active pharmaceutical ingredient (API).[10]

Table 1: Physicochemical Properties of Paliperidone-d4 and 2,4-Difluorobenzoyl Paliperidone

Property	Paliperidone-d4	2,4-Difluorobenzoyl Paliperidone
Catalogue No.	PA STI 071190[9]	PA 16 0021005[9]
CAS Number	1020719-55-4[9]	2640158-02-5[9]
Molecular Formula	$C_{23}H_{23}D_4FN_4O_3$[9]	$C_{23}H_{27}F_2N_3O_3$[9]
Molecular Weight	430.51 g/mol [9]	431.48 g/mol [9]

Mechanism of Action: Signaling Pathway

The therapeutic action of paliperidone is primarily attributed to its interaction with central nervous system receptors. The diagram below illustrates the proposed signaling pathway.

© 2026 BenchChem. All rights reserved.

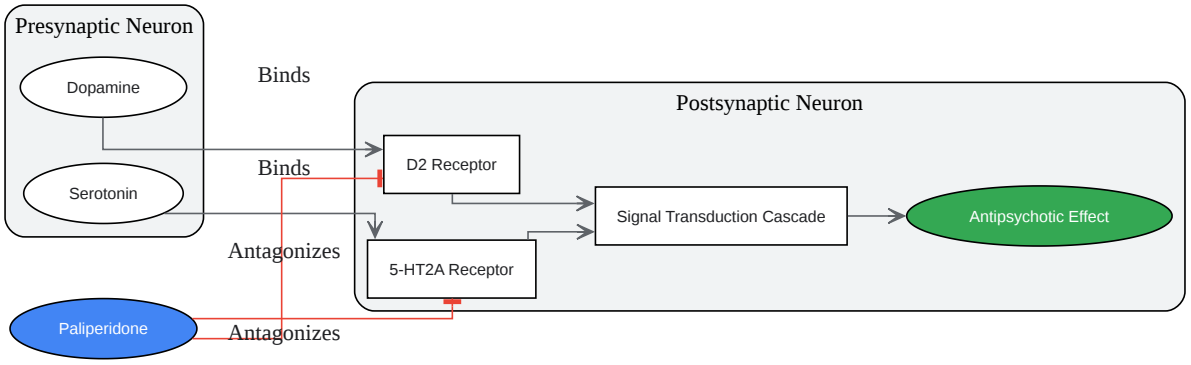

Click to download full resolution via product page

Caption: Proposed mechanism of action of Paliperidone.

Experimental Protocols for Analysis

A robust analytical method is essential for the quantification of paliperidone and the detection of related substances. High-Performance Liquid Chromatography coupled with Tandem Mass Spectrometry (HPLC-MS/MS) is a commonly employed technique.[8]

4.1. Sample Preparation

A solid-phase extraction (SPE) technique is often utilized for the extraction of paliperidone and its internal standard from a biological matrix like human plasma.[8]

Experimental Workflow for Sample Preparation

© 2026 BenchChem. All rights reserved.

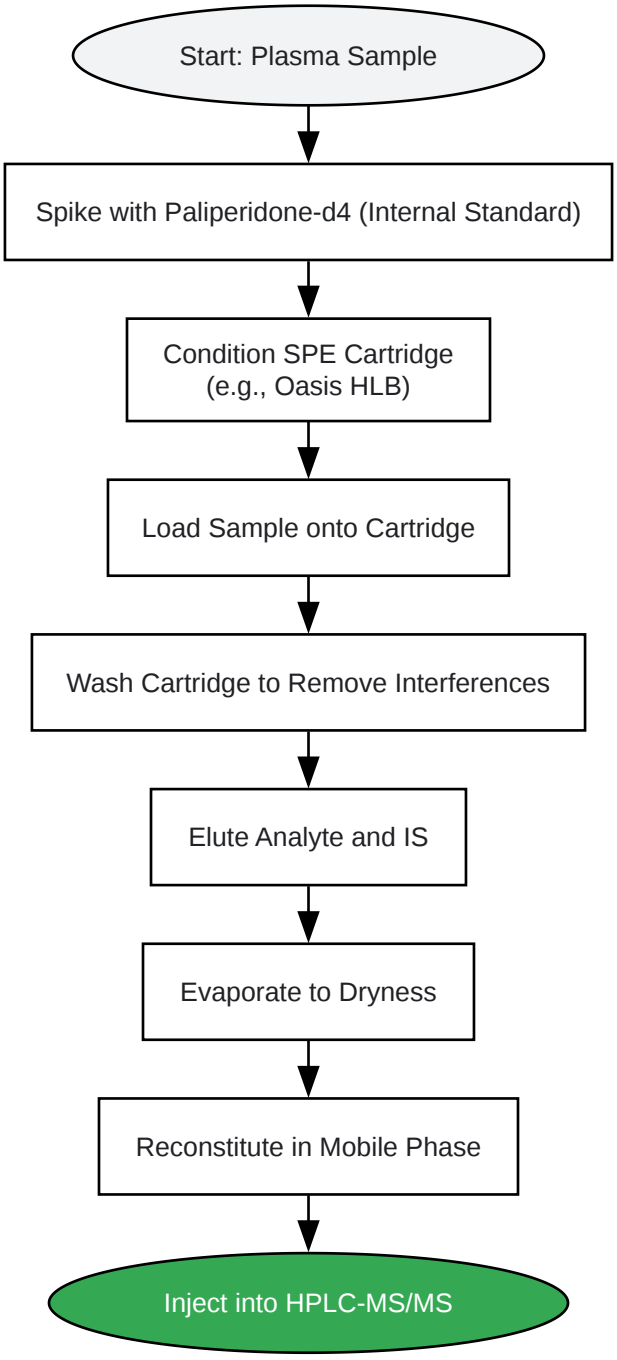

Click to download full resolution via product page

Caption: Solid-Phase Extraction (SPE) workflow for paliperidone analysis.

4.2. HPLC-MS/MS Method

The following table outlines a typical starting point for an HPLC-MS/MS method for the analysis of paliperidone. Method optimization and validation are required for specific applications.

© 2026 BenchChem. All rights reserved.

Table 2: Example HPLC-MS/MS Parameters

Parameter	Suggested Conditions
HPLC Column	C18 reverse-phase column (e.g., 50 x 2.1 mm, 3.5 µm)
Mobile Phase A	0.1% Formic acid in Water
Mobile Phase B	0.1% Formic acid in Acetonitrile
Gradient	Start at 5% B, ramp to 95% B over 5 min, hold for 2 min, return to initial conditions
Flow Rate	0.4 mL/min
Injection Volume	10 µL
Ionization Mode	Electrospray Ionization (ESI), Positive
MS/MS Transitions	Paliperidone: To be determined empiricallyPaliperidone-d4: To be determined empirically2,4-Difluorobenzoyl Paliperidone: To be determined empirically

Synthesis and Quality Control

The synthesis of paliperidone is a multi-step process, and impurities can be introduced at various stages.[10][11][12] For instance, didehydro paliperidone is a known impurity that can arise during synthesis.[10] The presence of impurities like 2,4-Difluorobenzoyl paliperidone must be monitored to ensure the final API meets the stringent purity requirements set by regulatory bodies.

Logical Relationship in Quality Control

© 2026 BenchChem. All rights reserved.

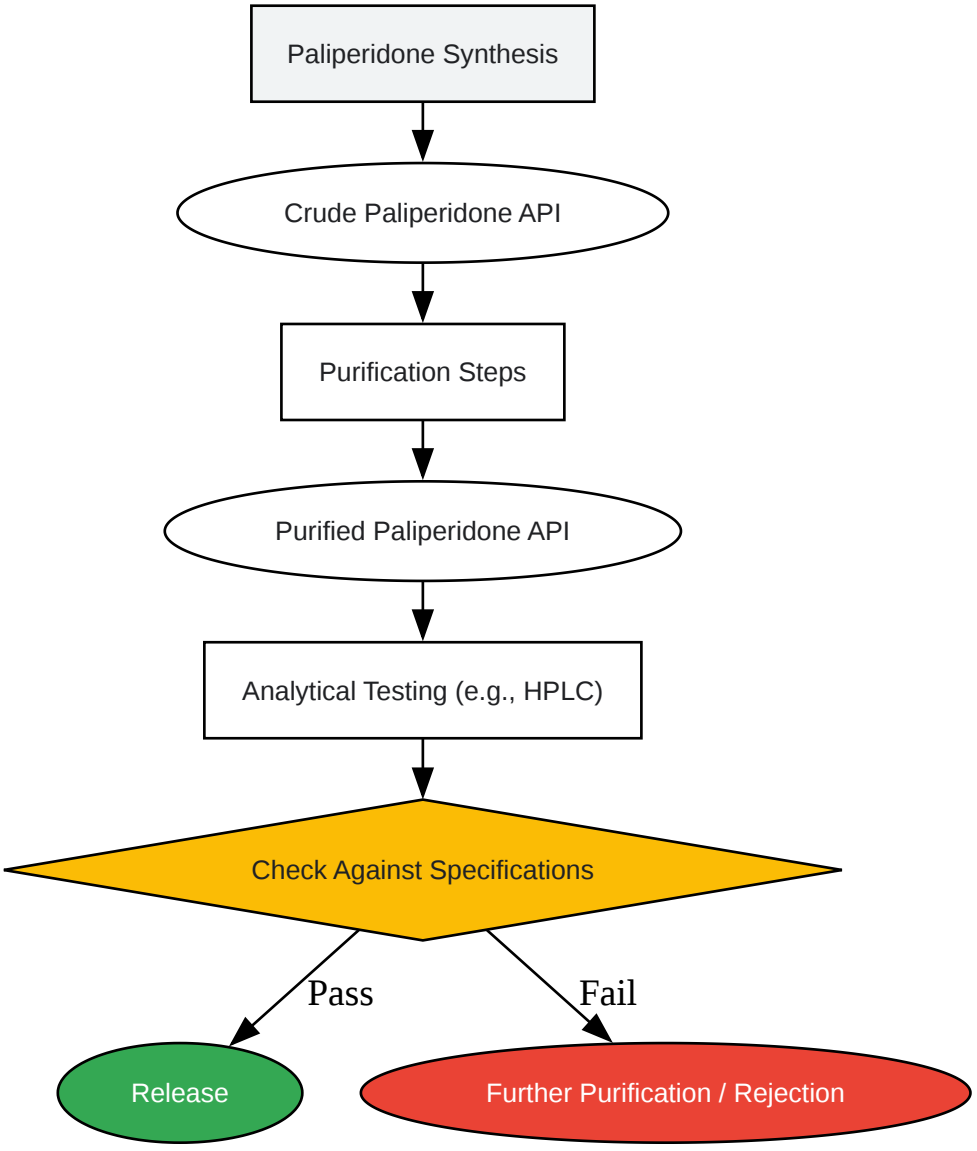

Click to download full resolution via product page

Caption: Quality control workflow for paliperidone API.

Conclusion

The analytical control of paliperidone is a multifaceted process that requires specific reagents and robust methodologies. The use of deuterated internal standards like paliperidone-d4 is essential for accurate quantification, while the monitoring of related substances such as 2,4-Difluorobenzoyl paliperidone is critical for ensuring the safety and efficacy of the final drug product. The information and protocols provided in this guide serve as a foundational resource for scientists and researchers in the pharmaceutical industry.

© 2026 BenchChem. All rights reserved.

Need Custom Synthesis?

BenchChem offers custom synthesis for rare earth carbides and specific isotopiclabeling.

Email: info@benchchem.com or Request Quote Online.

References

- 1. Paliperidone | C23H27FN4O3 | CID 115237 - PubChem [pubchem.ncbi.nlm.nih.gov]
- 2. psychdb.com [psychdb.com]
- 3. biorbyt.com [biorbyt.com]
- 4. go.drugbank.com [go.drugbank.com]
- 5. droracle.ai [droracle.ai]
- 6. What is the mechanism of Paliperidone Palmitate? [synapse.patsnap.com]
- 7. Paliperidone-d4 [simsonpharma.com]
- 8. researchgate.net [researchgate.net]
- 9. pharmaffiliates.com [pharmaffiliates.com]
- 10. scholarsresearchlibrary.com [scholarsresearchlibrary.com]
- 11. patentimages.storage.googleapis.com [patentimages.storage.googleapis.com]
- 12. US7977480B2 - Synthesis of paliperidone - Google Patents [patents.google.com]
- To cite this document: BenchChem. [Technical Guide: Analysis of Paliperidone and its Related Compounds]. BenchChem, [2026]. [Online PDF]. Available at: [https://www.benchchem.com/product/b12411409/docs#technical-guide-analysis-of-paliperidone-and-its-related-compounds]

Disclaimer & Data Validity:

The information provided in this document is for Research Use Only (RUO) and is strictly not intended for diagnostic or therapeutic procedures. While BenchChem strives to provide accurate protocols, we make no warranties, express or implied, regarding the fitness of this product for every specific experimental setup.

© 2026 BenchChem. All rights reserved.

Technical Support: The protocols provided are for reference purposes. Unsure if this reagent suits your experiment?

Need Industrial/Bulk Grade? Request Custom Synthesis Quote

BenchChem

Our mission is to be the trusted global source of essential and advanced chemicals, empowering scientists and researchers to drive progress in science and industry.

Contact

Address: 3281 E Guasti Rd

Ontario, CA 91761, United States

Phone: (601) 213-4426

Email: info@benchchem.com

Contact our Ph.D. Support Team for a compatibility check

© 2026 BenchChem. All rights reserved.