Technical Support Center: 1-epi-Regadenoson & Experimental Variability

Author: BenchChem Technical Support Team. **Date**: April 2026

Compound of Interest

Compound Name:	*1-epi-Regadenoson*
Cat. No.:	*B12399005*

Get Quote

Welcome to the Technical Support Center for researchers, scientists, and drug development professionals working with **1-epi-Regadenoson** and related A_2A adenosine receptor agonists. This resource provides troubleshooting guides and frequently asked questions (FAQs) to help you address variability in your experimental results.

Frequently Asked Questions (FAQs)

Q1: What is **1-epi-Regadenoson** and how does it relate to Regadenoson?

A1: **1-epi-Regadenoson** is a stereoisomer of Regadenoson, specifically an epimer. This means it has the same molecular formula and sequence of bonded atoms but differs in the three-dimensional orientation at one chiral center. It is often considered an impurity that can arise during the synthesis of Regadenoson. The presence of **1-epi-Regadenoson** and other impurities can be a significant source of variability in experimental results.

Q2: Why am I seeing batch-to-batch variability in my experiments?

A2: Batch-to-batch variability can stem from inconsistencies in the purity and composition of your **1-epi-Regadenoson** samples. Different synthesis batches may contain varying levels of

© 2026 BenchChem. All rights reserved.

impurities, including other stereoisomers or related substances. It is crucial to perform analytical validation on each new batch to ensure consistency.

Q3: How should I store **1-epi-Regadenoson** to minimize degradation?

A3: Proper storage is critical for maintaining the integrity of your compound. For solid **1-epi-Regadenoson**, it is recommended to store it at -20°C. If you are preparing stock solutions in a solvent like DMSO, it is advisable to aliquot the solution into smaller, single-use volumes and store them at -80°C to minimize freeze-thaw cycles. Adenosine analogs can be susceptible to degradation under acidic, basic, and oxidative conditions.

Q4: My experimental results are inconsistent or have a low signal. What are the potential causes?

A4: Inconsistent results or a low signal in your assays can be due to several factors:

- Compound Integrity: Verify the purity of your **1-epi-Regadenoson** using analytical methods like HPLC. Degradation of the compound can lead to reduced potency.
- Cell Health and Passage Number: Ensure your cells are healthy, in the logarithmic growth phase, and within a consistent, low passage number range.
- Reagent Concentration and Quality: Titrate all critical reagents to their optimal concentrations and check for expired or improperly stored components.
- Assay Conditions: Inconsistencies in incubation times, temperature, or plate reader settings can all contribute to variability.

Troubleshooting Guides

Issue 1: Higher than Expected EC_{50} or K_i Values

Symptoms:

- The dose-response curve is right-shifted compared to literature values for Regadenoson.
- Higher concentrations of the compound are needed to achieve the expected biological response.

© 2026 BenchChem. All rights reserved.

Potential Causes & Solutions:

Potential Cause	Troubleshooting Steps
Presence of Less Active Impurities (e.g., 1-epi-Regadenoson)	1. Purity Analysis: Analyze the purity of your compound stock using HPLC to quantify the percentage of 1-epi-Regadenoson and other impurities. 2. Source New Compound: If purity is low, consider obtaining a new batch of the compound from a reputable supplier with a detailed certificate of analysis.
Compound Degradation	1. Prepare Fresh Solutions: Prepare fresh working solutions from a solid stock. 2. Assess Solution Stability: Conduct a time-course experiment to determine the stability of the compound in your assay buffer over the duration of the experiment.
Incorrect Compound Concentration	1. Verify Stock Concentration: Re-verify the concentration of your stock solution. 2. Check Dilution Series: Carefully review the calculations and pipetting for your serial dilutions.
Cellular Factors	1. Check Receptor Expression: Ensure consistent A_2A receptor expression levels in your cell line. 2. Monitor Cell Passage Number: Use cells within a narrow and low passage number range.

Issue 2: High Variability Between Replicate Wells

Symptoms:

- Large standard deviations between replicate wells.
- Inconsistent results within the same experiment.

Potential Causes & Solutions:

© 2026 BenchChem. All rights reserved.

Potential Cause	Troubleshooting Steps
Uneven Cell Seeding	1. Ensure Homogeneous Cell Suspension: Gently mix the cell suspension before and during plating. 2. Consistent Plating Technique: Use a consistent pipetting technique and consider a brief, gentle agitation of the plate after seeding to ensure even distribution.
Pipetting Errors	1. Calibrate Pipettes: Regularly calibrate all pipettes used in the assay. 2. Proper Pipetting Technique: Use appropriate pipette volumes and ensure consistent dispensing.
Edge Effects in Microplates	1. Avoid Outer Wells: Do not use the outermost wells of the microplate for experimental samples. Fill them with sterile media or PBS to create a humidity barrier. 2. Use Specialized Plates: Consider using plates designed to minimize edge effects.
Compound Precipitation	1. Check Solubility: Ensure your compound is fully dissolved in the assay buffer at the highest concentration used. 2. Visual Inspection: Visually inspect the wells for any signs of precipitation.

Data Presentation

Table 1: Reported In Vitro Activity of Regadenoson

Parameter	Receptor	Cell Line	Value	Reference
K_i	Human A_2A	HEK-293	290 nM	[1]
EC_{50}	Human A_2A	PC-12	6.4 ± 1.2 nM	[2]

Note: Specific quantitative data for the biological activity of **1-epi-Regadenoson** is not readily available in the searched literature. The presence of this and other impurities is expected to

© 2026 BenchChem. All rights reserved.

alter the observed potency of a Regadenoson sample.

Experimental Protocols

Radioligand Binding Assay for A_2A Adenosine Receptor

Objective: To determine the binding affinity (K_i) of a test compound for the A_2A adenosine receptor.

Methodology:

- Membrane Preparation:
  - Culture cells stably expressing the human A_2A adenosine receptor (e.g., HEK-293 or CHO cells).
  - Harvest the cells and homogenize them in an ice-cold buffer (e.g., 50 mM Tris-HCl, pH 7.4).
  - Centrifuge the homogenate at low speed to remove nuclei and cellular debris.
  - Centrifuge the supernatant at high speed to pellet the cell membranes.
  - Resuspend the membrane pellet in a suitable assay buffer.
- Binding Reaction:
  - In a 96-well plate, add the cell membrane preparation, a known concentration of a radiolabeled A_2A receptor ligand (e.g., [^{3}H]-CGS21680), and varying concentrations of the unlabeled test compound (**1-epi-Regadenoson**).
  - For determining non-specific binding, a high concentration of a known A_2A receptor agonist or antagonist is used in place of the test compound in a separate set of wells.
  - Incubate the plate at a specified temperature (e.g., 25°C) for a sufficient time to reach equilibrium (e.g., 60-120 minutes).
- Termination and Detection:

© 2026 BenchChem. All rights reserved.

- Rapidly filter the contents of each well through a glass fiber filter mat using a cell harvester to separate the bound from the free radioligand.
- Wash the filters with ice-cold wash buffer to remove any unbound radioligand.
- Measure the radioactivity retained on the filters using a scintillation counter.

- Data Analysis:
  - Calculate the specific binding by subtracting the non-specific binding from the total binding.
  - Plot the specific binding as a function of the test compound concentration and fit the data to a one-site competition model to determine the IC_{50} value.
  - Calculate the K_i value using the Cheng-Prusoff equation: $K_i = IC_{50} / (1 + [L]/K_a)$, where [L] is the concentration of the radioligand and K_a is its dissociation constant.

cAMP Accumulation Assay

Objective: To measure the functional potency (EC_{50}) of an A_2A adenosine receptor agonist.

Methodology:

- Cell Culture and Plating:
  - Culture cells expressing the A_2A adenosine receptor (e.g., HEK-293 or CHO cells) to approximately 80-90% confluency.
  - Harvest the cells and plate them in a 96-well or 384-well plate at a predetermined optimal density.
- Compound Treatment:
  - Prepare a serial dilution of the test compound (**1-epi-Regadenoson**).
  - Pre-incubate the cells with a phosphodiesterase (PDE) inhibitor (e.g., IBMX) to prevent the degradation of cAMP.

© 2026 BenchChem. All rights reserved.

- Add the different concentrations of the test compound to the cells and incubate for a specified time (e.g., 30-60 minutes) at 37°C.

- cAMP Detection:
  - Lyse the cells to release the intracellular cAMP.
  - Measure the cAMP levels using a commercially available kit, such as a competitive immunoassay (e.g., HTRF, ELISA) or a reporter gene assay.

- Data Analysis:
  - Generate a dose-response curve by plotting the cAMP concentration against the log of the test compound concentration.
  - Fit the data to a sigmoidal dose-response model to determine the EC_{50} value, which is the concentration of the agonist that produces 50% of the maximal response.

Visualizations

© 2026 BenchChem. All rights reserved.

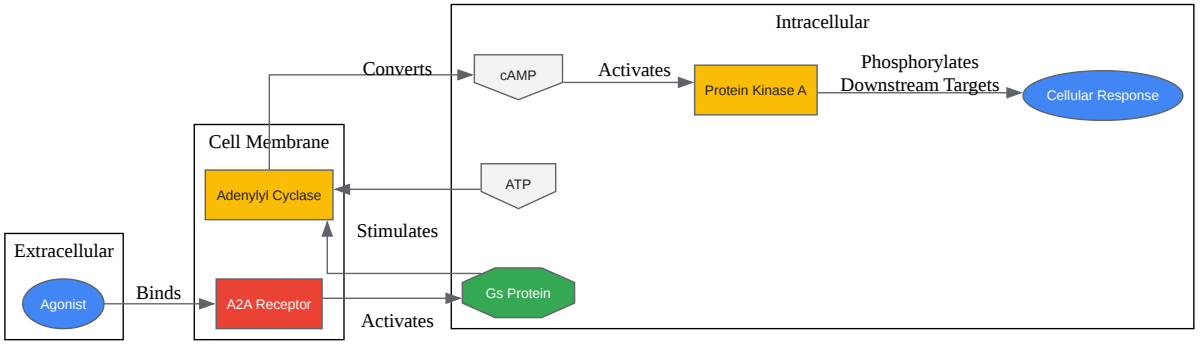

© 2026 BenchChem. All rights reserved.

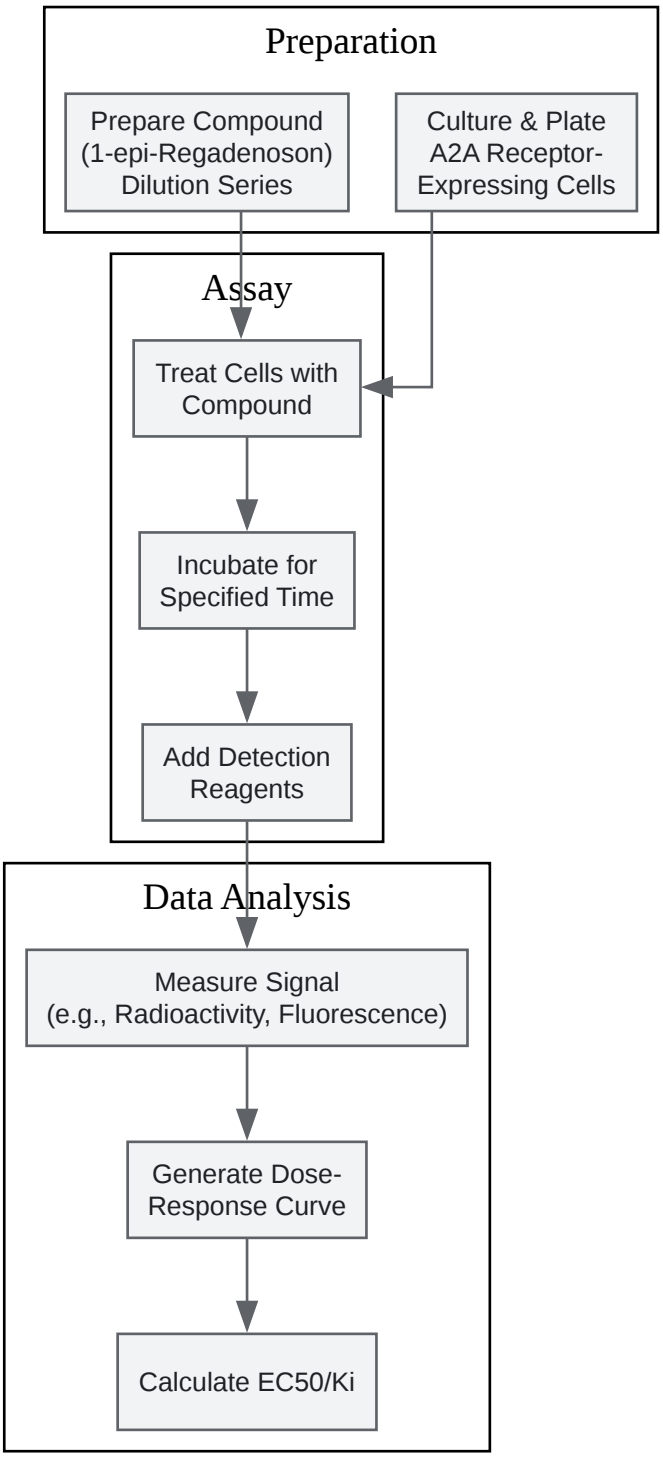

© 2026 BenchChem. All rights reserved.

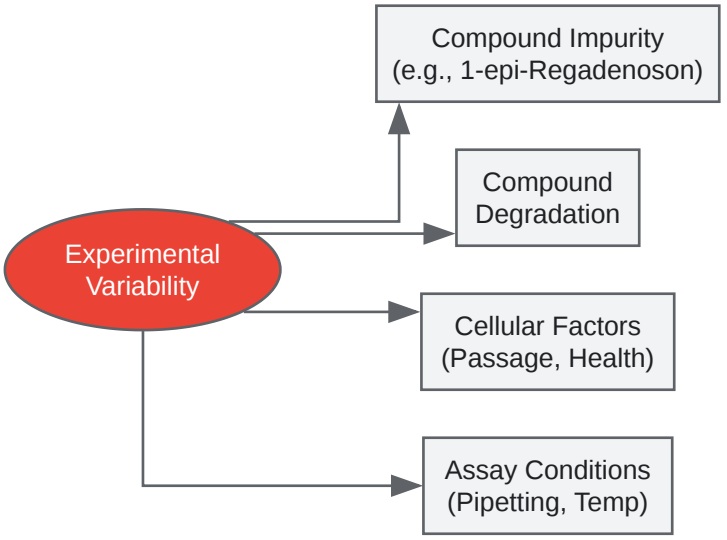

Click to download full resolution via product page

Need Custom Synthesis?

BenchChem offers custom synthesis for rare earth carbides and specific isotopiclabeling.

Email: info@benchchem.com or Request Quote Online.

References

- 1. selleckchem.com [selleckchem.com]
- 2. Regadenoson in the detection of coronary artery disease - PMC [pmc.ncbi.nlm.nih.gov]
- To cite this document: BenchChem. [Technical Support Center: 1-epi-Regadenoson & Experimental Variability]. BenchChem, [2026]. [Online PDF]. Available at: [https://www.benchchem.com/product/b12399005/docs#technical-support-center-1-epi-regadenoson-experimental-variability]

Disclaimer & Data Validity:

The information provided in this document is for Research Use Only (RUO) and is strictly not intended for diagnostic or therapeutic procedures. While BenchChem strives to provide accurate protocols, we make no warranties, express or implied, regarding the fitness of this product for every specific experimental setup.

© 2026 BenchChem. All rights reserved.

Technical Support: The protocols provided are for reference purposes. Unsure if this reagent suits your experiment?

Need Industrial/Bulk Grade? Request Custom Synthesis Quote

BenchChem

Our mission is to be the trusted global source of essential and advanced chemicals, empowering scientists and researchers to drive progress in science and industry.

Contact

Address: 3281 E Guasti Rd

Ontario, CA 91761, United States

Phone: (601) 213-4426

Email: info@benchchem.com

Contact our Ph.D. Support Team for a compatibility check

© 2026 BenchChem. All rights reserved.